No. 375

THE WARREN GROUP

THE L. A. BENSON CO., INC.
3707 East Monument St.
Reply to: P.O. Box 2137
Baltimore, Maryland 21203
(301) 342-9225

THE WARREN GROUP

COLUMBIAN VISE
CINCINNATI TOOL
WARREN TOOL

Division of Warren Tool Corporation • Hiram, Ohio 44234 • Phone 216/569-3224

This new catalog combines the products of Warren Tool Corporation, Columbian Vise & Mfg. Co. and Cincinnati Tool Co. The Warren Group now will function as the marketing organization for all three manufacturing plants and will operate out of a specially designed and engineered distribution center in Hiram, Ohio. Conveyors, flow racks and a computer will enable us to provide better Order Processing, Shipments, Inventory Control and Invoicing. It is designed to provide operating efficiencies that will be to our mutual benefit.

Table of contents

WARREN TOOLS

	Page
Picks	3
Mattocks/Hoes/Wedges/Hammers	4
Sledges/Mauls/Bars	5
Bars/Tongs	6
Chisels/Punches/Pins	7
Track Tools	8, 9, 10

COLUMBIAN VISES & LEVELS

Machinists' Vises	11
Swivel Base Vises	12
Sheet Metal Vises/Jaws	13
Drill Press/Angle Vises	13
Clamp Vise/Pipe Vise/Anvil	14
Workshop/Home Shop/Carpenters' Vises	15
Woodworkers' Vises	16, 17
Levels	18, 19
Reference Charts	20, 21

CINCINNATI CLAMPS/CHISELS/PUNCHES

Spring Clamp/Super Clamp	22
Super Junior/Carriage/General Purpose/Deep Reach	23
Welders' Clamps/Heavy Service	24
Small C-Clamps	25
Pipe Fixture Clamps	25
Mitre Frames	26
Bar Clamps	26, 27
Quick Clamps	27
Hand Screws	28
Chisels/Punches/Drills	28, 29, 30, 31

How to order

You may now order all three product lines on the same order. One order will enable us to process your order and ship by the fastest, most economical method.

One order will reduce your costs of purchasing, receiving and accounting. One order will make it easier to achieve the prepaid minimum shipment, regardless of product mix. Please send all orders to The Warren Group, P. O. Box 68, Hiram, Ohio 44234.

All items herein have NIDA-SIDA five digit numbers.

The Warren Group manufacturer's code number is 8580.

WARREN TOOLS

Warren Tool Corporation has long been proud of its production of "Warren-Teed" products. All tools are manufactured in our plant in Warren, Ohio. Our exacting standards in the control of raw materials and heat treatment assure you and your customers the finest quality and superior product performance.

Handles for all tools are made from selected U.S. Hickory and are carefully formed to guarantee a perfect fit.

Many of these tools meet government specifications, but since these are often changed, a check with the factory is suggested.

Wear Safety Goggles.

PICKS

Clay Picks No. 5

Tough, high carbon steel. Perfect anchor curve. No. 6 eye. Chisel and Point. Slip-on type handle.

Weight	Length	Item No.
5 lbs.	21″	00101
6 lbs.	23″	00102
7 lbs.	25″	00103
8 lbs.	26″	00104
9 lbs.	27″	00105

Five to a shipping carton.

FLC-1310

PICKS

Adze Eye Coal Pick No. 18

High carbon steel. No. 10 eye-shape only. Fitted handle.

Weight	Length	Item No.	
		Hdld.	Head Only
3 lbs.	18″	00209	00210

Ten to a shipping carton.
Five to a carton Hdld.

Drifting Picks No. 6

High carbon steel. No 10 eye. Fitted handle.

Weight	Length	Item No.	
		Hdld.	Head Only
No. 2—4 lbs.	21″	00202	00201
No. 4—5 lbs.	25″	00204	00203

Ten to a shipping carton.
Five to a carton Hdld.

Contractors' Pick No. 7

High carbon steel. No. 6 eye. Slip-on type handle.

Weight	Length	Item No.
8 lbs.	30″	00205

Five to a shipping carton.

Poll Pick No. 12

High carbon steel. No.10 eye-shape only. Slip-on type handle.

Weight	Length	Item No.
		Head Only
No. 4—5 lbs.	16″	00207

Ten to a shipping carton.

Pick Mattocks No. 20

High carbon steel. Quality forged, heat treated. Polished bevel. No. 6 eye. Slip-on type handle.

Weight	Length	Blade	Point	Item No.
5 lbs.	19″	8″ x 3½″	8″	00301
6 lbs.	20″	8″ x 4″	9″	00302

Five to a shipping carton.

Cutter Mattocks No. 22

High carbon steel. Self-clearing blade taper. Slip-on type handle.

Weight	Length	Eye No.	Blade	Cutter	Item No.
3 lbs.	12⅞″	7	3″ x 6¼″	2½″ x 3⅞″	00306
5 lbs.	15½″	6	3½″ x 8″	3″ x 4½″	00307
6 lbs.	16½″	6	4″ x 8″	3½″ x 5½″	00308

Five to a shipping carton.

All above FLC-1310

Ax Eye Garden Mattock No. 22-AE-H

High carbon steel. Handled, lightweight garden mattock with No. 10 eye, fitted double bit ax handle.
Blade 2⅝" x 6¼". Cutter 2³⁄₁₆" x 3⅜".

Weight	Length	Item No. Hdld.
4 lbs.	12½"	00402

Five to a shipping carton. **FLC-1310**

Grub Hoe No. 30

High carbon steel. Eye No. 8. Hoe size 3¾" x 7". Slip-on type handle.

Weight	Length	Item No.
3½ lbs.	10½"	00408

Ten to a shipping carton. **FLC-1310**

Square Head Wedges No. 120

High carbon steel, heat treated.

Weight	Length	Head	Bit	Item No.
3 lbs.	7½"	1¼"	2"	03601
4 lbs.	8½"	1⅜"	2¼"	03602
5 lbs.	9"	1½"	2⅜"	03603
6 lbs.	10"	1⅝"	2½"	03604
8 lbs.	11"	1⅞"	2¾"	03605

Ten to a shipping carton, except 8 lb. size. **FLC-2480**

Oregon Splitting Wedge No. 123

High carbon steel, heat treated.

Weight	Length	Head	Bit	Item No.
6 lbs.	8¾"	1¾"	4"	03801

FLC-2480

Stave Wedges No. 136

High carbon steel, heat treated.

Weight	Length	Head	Bit	Item No.
3 lbs.	6¾"	2" x 1¼"	3⅛"	03901
4 lbs.	7½"	2⅛" x 1⅜"	3⅜"	03902

Ten to a shipping carton. **FLC-2480**

Aluminum Chain Saw Wedge No. 137-A

Weight	Length	Head	Bit	Item No.
1 lb.	7"	1¾" x 1"	2⅜"	04001

Ten to a shipping carton. **FLC-2480**

HAMMERS

Bush Hammer No. 60-H

Alloy steel, heat treated.

Weight	Eye No. 2 Size	Handle Length	Face	Item No. Hdld.	Item No. Head Only
4 lbs.	¾"x1"	15"	1¾"	00502	00501

Single Face Mason, Spalling, or Stone Hammers No. 71-H

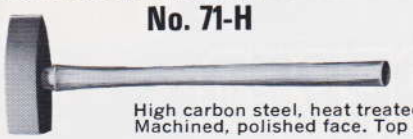

High carbon steel, heat treated.
Machined, polished face. Top grade handle.

Weight	Eye No. 2 Size	Handle Length	Face	Item No. Hdld.	Item No. Head Only
4 lbs.	¾"x1"	15"	1⅞"x1¼"	00604	00603
8 lbs.	1" x1¼"	32"	2⅜"x1½"	00606	00605

Nevada (Long) Pattern Striking Hammers No. 75-H

High carbon steel, heat treated.
Machined, polished faces. Top grade handle.

Weight	Eye No. 2 Size	Handle Length	Face	Item No. Hdld.	Item No. Head Only
*4 lbs.	¾"x1"	15"	1½"	00804	00803
6 lbs.	1" x1¼"	32"	1¾"	00808	00807
8 lbs.	1" x1¼"	32"	1¹⁵⁄₁₆"	00810	00809
10 lbs.	1" x1⅜"	34"	2⅛"	00812	00811
12 lbs.	1" x1⅜"	34"	2¼"	00814	00813
16 lbs.	1" x1⅜"	34"	2½"	00816	00815

*Available with 32" handle (00806) — packed 5 to a carton.
4 lb. packed 10 to a carton (handled).
6, 8, 10, and 12 lb. packed 5 to a carton.
16 lb. packed 3 to a carton (handled).

Oregon (Short) Pattern Striking Hammers No. 76-H

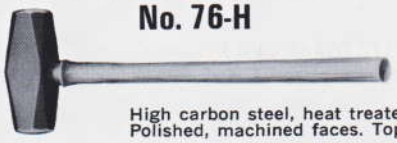

High carbon steel, heat treated.
Polished, machined faces. Top grade handle.

Weight	Eye No. 2 Size	Handle Length	Face	Item No. Hdld.	Item No. Head Only
*4 lbs.	¾"x1"	15"	1⅝"	00902	00901
6 lbs.	1" x1¼"	32"	1⅞"	00906	00905
8 lbs.	1" x1¼"	32"	2¹⁄₁₆"	00908	00907
10 lbs.	1" x1⅜"	34"	2¼"	00910	00909

*Available with 32" handle (00904) — packed 5 to a carton.
4 lb. packed 10 to a carton (handled).
Balance packed 5 to a carton.

New England (Short) Pattern Head Drilling Hammers No. 80-H

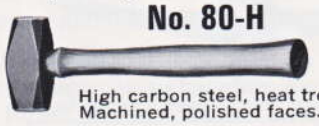

High carbon steel, heat treated.
Machined, polished faces. Top grade handle.

Weight	Eye No. 2 Size	Handle Length	Face	Item No. Hdld.
2 lbs.	¾"x1"	10½"	1¼"	01002
3 lbs.	¾"x1"	10½"	1½"	01004
4 lbs.	¾"x1"	10½"	1⁹⁄₁₆"	01006

Five (handled) to a shipping carton.

All above FLC-2456 except items 4 lbs. and less (2454).

SLEDGES/MAULS

Oval Face Stone Sledges No. 74-H

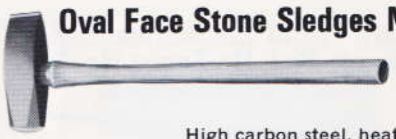

High carbon steel, heat treated.
Machined, polished face. Top grade handle.

Weight	Eye No. 2 Size	Handle Length	Face	Item No.	
				Hdld.	Head Only
8 lbs.	1"x1¼"	32"	2¼"	00702	00701

Double Face Sledges No. 84-H

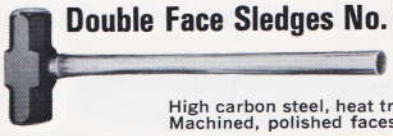

High carbon steel, heat treated.
Machined, polished faces. Top grade handle.

Weight	Eye No. 2 Size	Handle Length	Face	Item No.	
				Hdld.	Head Only
2 lbs.	¾"x1"	15"	1½"	01102	01101
2½ lbs.	¾"x1"	15"	1⅝"	01104	01103
3 lbs.	¾"x1"	15"	1⅝"	01106	01105
*4 lbs.	¾"x1"	15"	1¾"	01108	01107
6 lbs.	1" x1¼"	32"	2⅛"	01112	01111
8 lbs.	1" x1¼"	32"	2¼"	01114	01113
10 lbs.	1" x1⅜"	34"	2½"	01116	01115
12 lbs.	1" x1⅜"	34"	2⅝"	01118	01117
16 lbs.	1" x1⅜"	34"	2⅞"	01120	01119
20 lbs.	1¼"x1½"	36"	3"	01122	01121

*Available with 32" handle (01110) — packed 5 to a carton.
2, 2½, 3, and 4 lb. packed 10 to a carton (handled).
6, 8, 10, and 12 lb. packed 5 to a carton.
16 lb. packed 3 to a carton (handled).

Cross Pein Sledges No. 85-H

High carbon steel, heat treated.
Machined, polished face. Top grade handle.

Weight	Eye No. 2 Size	Handle Length	Face	Item No.
				Hdld.
2 lbs.	¾"x1"	15"	1½"	01302
3 lbs.	¾"x1"	15"	1⅝"	01306
8 lbs.	1" x1¼"	32"	2¼"	01308

Ship or Boat Maul No. 103-H

High carbon steel, heat treated.
Machined, polished face. Top grade handle.

Weight	Eye No. 2 Size	Head Round	Bit Small Face	Hdle. Lgth.	Item No.	
					Hdld.	Head Only
5 lbs.	1"x1¼"	1⅞"	½"	32"	01702	01701

Oregon Woodchoppers' Mauls

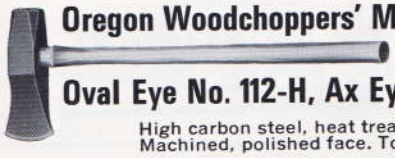

Oval Eye No. 112-H, Ax Eye No. 113-H

High carbon steel, heat treated.
Machined, polished face. Top grade handle.

Weight	Eye No. 2 Size	Head	Bit	Hdle. Lgth.	Oval Item No.		Axe Item No.	
					Hdld.	Head Only	Hdld.	Head Only
6 lbs.	1"x1¼"	1⅞"	3½"	32"	01802	01801	01902	01901
8 lbs.	1"x1¼"	2"	4"	32"	01804	01803	01904	01903

Shipped four (handled) to a shipping carton.

BARS

Wear Safety Goggles

Wedge Point Crowbars No. 40

High carbon steel. Smooth taper, roll forged.

Weight	Length	Stock	Pieces per Standard Package	Item No.
10 lbs.	48"	1"	6	02001
12 lbs.	51"	1⅛"	6	02002
14 lbs.	54"	1⅛"	4	02003
18 lbs.	60"	1¼"	4	02005
22 lbs.	64"	1⅜"	3	02006
* 26 lbs.	66"	1½"	3	02007

*26 lbs. size heat treated.

Pinch Point Crowbars No. 41

High carbon steel. Smooth taper, roll forged.

Weight	Length	Stock	Pieces per Standard Package	Item No.
6 lbs.	36"	⅞"	6	02101
10 lbs.	48"	1"	6	02102
12 lbs.	51"	1⅛"	6	02103
14 lbs.	54"	1⅛"	4	02104
18 lbs.	60"	1¼"	4	02106
22 lbs.	64"	1⅜"	3	02107
* 26 lbs.	66"	1½"	3	02108

*26 lbs. size heat treated.

Tamper Top Post Hole Digger No. 49

One-piece high carbon steel.

Weight	Lgth.	Stock	Blade	Taper	Item No.
16 lbs.	69"	1"	2½" x 10"	2⅜"	02701

Four to a shipping bundle.

High Quality Wrecking Bars No. 45 H.Q.

Highest quality hex steel, heat treated and polished chisel point and claw.

Length	Stock	Pieces per Standard Package	Weight per Carton or Bundle	Item No.
18"	⅝"	5	11 lbs.	02901
24"	¾"	5	19 lbs.	02902
30"	¾"	5	23 lbs.	02903
36"	¾"	5	28 lbs.	02904
36"	⅞"	5	36 lbs.	02905

Order by stock size and length.

BARS

Carpenters' Wrecking Bars No. 45

High carbon hex steel.

Length	Stock	Pieces per Standard Package	Weight per Carton or Bundle	Item No.
18″	5/8″	10	17 lbs.	02802
24″	3/4″	10	33 lbs.	02803
30″	3/4″	10	39 lbs.	02804
36″	3/4″	5	24 lbs.	02805
36″	7/8″	5	36 lbs.	02806

Order by stock size and length.

Concrete Form Stripping Bar Claw End No. 450

High carbon hex steel.

Weight	Length	Stock	Pieces per Standard Package	Wt. per Carton or Bundle	Item No.
8 lbs.	42″	7/8″	5	40 lbs.	02501
13 lbs.	48″	1″	5	65 lbs.	02502

All above FLC-2491

Concrete Form Stripping Bar No. 451

High carbon hex steel.

Weight	Length	Stock	Pcs. per Standard Package	Wt. per Carton or Bundle	Item No.
8 lbs.	42″	7/8″	5	40 lbs.	02503
13 lbs.	48″	1″	5	65 lbs.	02504

Regular Slate or Trunkman's Bar No. 453

High carbon hex steel.

Weight	Length	Stock	Pcs. per Standard Package	Wt. per Carton or Bundle	Item No.
14 lbs.	60″	1″	4	56 lbs.	02604

Chisel end 1½″ wide.

San Angelo or Ranch Bar No. 455

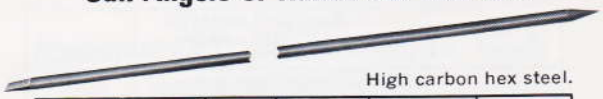

High carbon hex steel.

Weight	Length	Stock	Pcs. per Standard Package	Wt. per Carton or Bundle	Item No.
11 lbs.	60″	7/8″	4	44 lbs.	02606
13 lbs.	72″	7/8″	4	52 lbs.	02607
17 lbs.	72″	1″	4	68 lbs.	02609

All above FLC-2491

TONGS

Single Pick-Up Tongs No. 200

Over-all Length	Lip Size	Rein Size	Weight	Item No.
24″	3/16″x7/8″	7/16″x19¼″	3 lbs.	06304

Order by length.

Double Pick-Up Tongs No. 200-A

Over-all Length	Lip Size	Rein Size	Weight	Item No.
24″	3/16″x7/16″	7/16″x18″	2¾ lbs.	06305

Order by length.

Bolt or Curved Lip Tongs No. 202

Over-all Length	To Hold Rds.	Lip Size	Rein Size	Weight	Item No.
18″	¼″	⅛″x½″	7/16″x13⅜″	2 lbs.	06401
20″	⅜″	⅛″x½″	7/16″x15¼″	2 lbs.	06402
20″	½″	⅛″x⅝″	7/16″x15⅜″	2½ lbs.	06403
22″	¾″	⅛″x⅞″	7/16″x17⅜″	2¾ lbs.	06405
24″	1″	⅛″x1″	7/16″x19⅛″	3 lbs.	06407

Order by rounds and length.

Straight Lip Tongs No. 203

Over-all Length	Lip Size	Rein Size	Weight	Item No.
18″	⅜″x1″	⅜″x14″	2½ lbs.	06501
24″	⅜″x1″	7/16″x20″	3¼ lbs.	06502

Order by length.

Flat Jaw Gad Tongs No. 204

Over-all Length	Lip Size	Rein Size	Weight	Item No.
24″	7/32″x7/8″	7/16″x19⅜″	3 lbs.	06503

Order by length.

CHISELS, PUNCHES and PINS

Blacksmiths' Hot Chisel No. 161

Alloy steel, heat treated.

Size	Weight	Eye No. 2 Size	Hdle. Lgth.	Bit	Item No. Hdld.	Item No. Head Only
1½″	3 lbs.	¾″x1″	15″	2″	05204	05203

Blacksmiths' Cold Chisel No. 162

Alloy steel, heat treated.

Size	Weight	Eye No. 2 Size	Hdle. Lgth.	Bit	Item No. Hdld.	Item No. Head Only
1¼″	2 lbs.	¾″x1″	15″	1¼″	05302	05301
1½″	3 lbs.	¾″x1″	15″	1½″	05304	05303
1¾″	5 lbs.	1″ x1¼″	32″	1¾″	05306	05305

Round Punches No. 165

Alloy steel, heat treated.

Size	Weight	Length	Eye No. 2 Size	Item No. Hdld.	Item No. Head Only
⅜″	1½ lbs.	7¼″	¾″x1″	05604	05603
½″	2 lbs.	7½″	¾″x1″	05606	05605
⅝″	2¼ lbs.	7¾″	¾″x1″	05608	05607
¾″	2½ lbs.	8″	¾″x1″	05610	05609
⅞″	3 lbs.	8¼″	¾″x1″	05612	05611
1″	3½ lbs.	8½″	¾″x1″	05614	05613

Furnished with 15″ handles.

Backing Out Punches No. 179

Alloy steel, heat treated.

Size	Weight	Length	Eye No. 2 Size	Item No. Hdld.	Item No. Head Only
½″	1¾ lbs.	7½″	¾″x1″	05702	05701
⅝″	2 lbs.	7¾″	¾″x1″	05704	05703
¾″	2½ lbs.	8″	¾″x1″	05706	05705
⅞″	3 lbs.	8¼″	¾″x1″	05708	05707
1″	3½ lbs.	8½″	¾″x1″	05710	05709

Furnished with 15″ handles.

Barrel Type Drift Pins No. 176

Size	Weight	Length	Size of Stock	For Holes	Item No.
½″	7 oz.	6½″	9/16″	½″	05901
⅝″	10 oz.	7″	11/16″	⅝″	05902
¾″	14 oz.	7½″	13/16″	¾″	05903
⅞″	20 oz.	8″	15/16″	⅞″	05904
1″	26 oz.	8½″	1 1/16″	1″	05905

EYE SPECIFICATIONS

The shapes of the eyes of the different tools listed and described in the preceding pages are designated by numbers corresponding to those of the U.S. Dept. of Commerce Heavy Forged Hand Tools Simplified Practice Recommendation — R17-47, effective October 15, 1947.

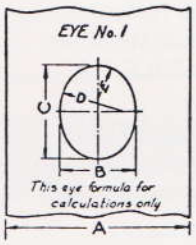

Eye formula:
- A—Size of stock.
- B—40 percent of A.
- C—125 percent of B approximate.
- D—5/6 of B.
- E—To suit dimensions B, C, and D.

Note—Manufacturers have a tolerance limit of 1/16 in. above and 1/32 in. under all eyes to allow for punch wear.

On eyes #2, 3, 4—
- 3° taper on cross section.
- 4° taper on long section.

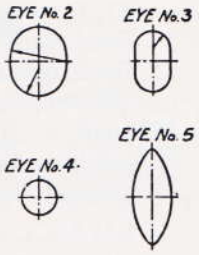

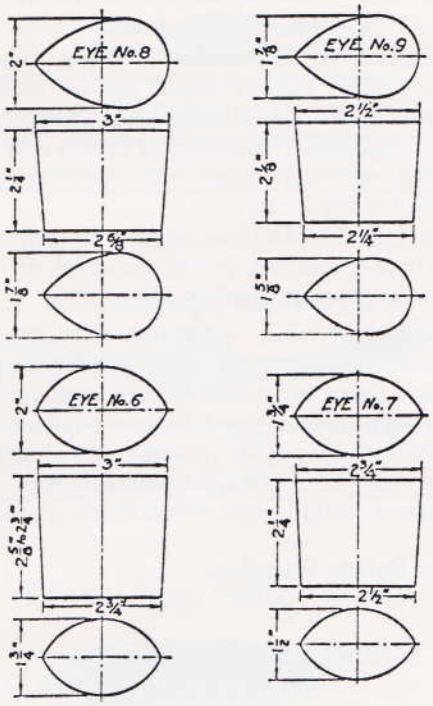

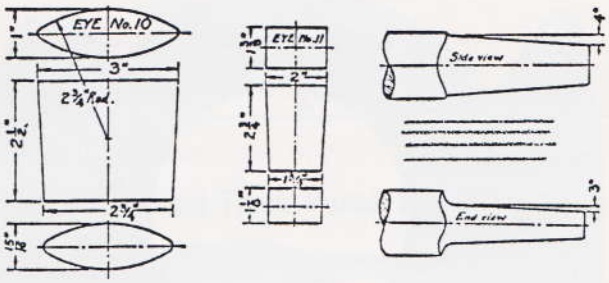

WARREN TOOLS

For RAILROAD TRACK MAINTENANCE

Warren Tool Corporation's experience in the exclusive manufacture of heavy hand tools for railroad use has developed these features:

STEEL — High carbon special quality (Warren-Teed grade) or special electric furnace steel for Devil tools which meets or exceeds all A.R.E.A. specifications.

FINISH — All striking faces and cutting bits are polished. Devil Alloy tools are painted Safety Orange — Warren-Teed grade, Dubonnet.

BALANCE — Accurately machined radii on striking tools, cutting edges ground to gauge, and close attention to A.R.E.A. specifications make Warren tools top performers for track work.

HANDLES — A.R.E.A. recommended (or better) grade hickory, flame finished and lacquered or natural finish and waxed to resist weather and vermin damage. Hydraulically driven and wedged, and most important, accurately inserted at the factory.

TREATMENT — All tools receive Warren Tool deep heat treatment. Increased depth of hardness gives longer tool life.

QUALITY CONTROL — All types of railroad track tools receive numerous visual examinations as they are being processed as well as physical tests for proper hardness and dimensional accuracy. In addition, alloy spike mauls, track chisels and sledges are 100% Magnaglo inspected for seams, forging laps and quench cracks.

Wear Safety Goggles.

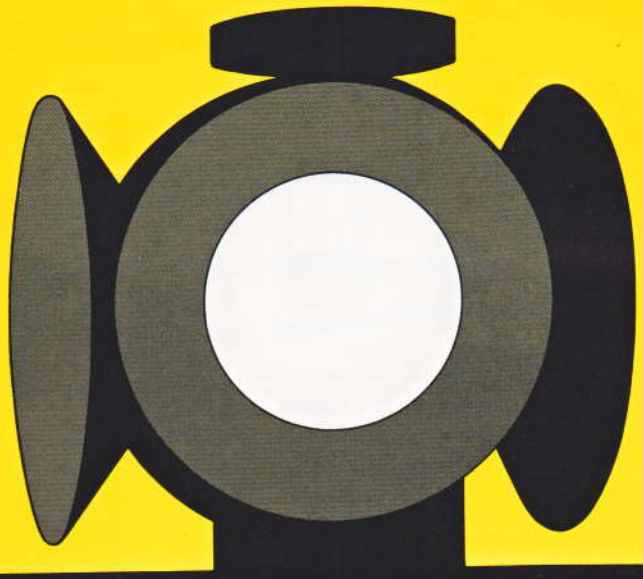

Devil ALLOY STEEL TRACK TOOLS

Hack Devil Full Head Adze No. 13AX

Wgt.	Lgth.	Eye No.	Eye Size	Handle Length	Size Blade or Bit	A.R.E.A. Plan	Item No.
6 lbs.	12″	11	1¾″ x 2″	34″	4″ x 9″	No. 12-62	05002

Cut Devil Track Chisel No. 160AX

Wgt.	Lgth.	Eye No.	Eye Size	Handle Length	Size Blade or Bit	A.R.E.A. Plan	Item No.
5½ lbs.	10½″	3	¾″ x 1⅜″	24″	1⅜″	No. 17 Design 2	05201

Ox Devil Hot Cutting Chisel No. 161X

Wgt.	Lgth.	Eye No.	Eye Size	Handle Length	Size Blade or Bit	Item No.
4¼ lbs.	9″	3	¾″ x 1⅜″	24″	2⅜″	05205 W/H 05206

Slug Devil Bell Pattern Spike Maul No. 101X

Wgt.	Lgth.	Eye No.	Eye Size	Handle Length	A.R.E.A. Plan	Item No.
10 lbs.	15″	2	1″ x 1⅜″	36″	No. 3 Design 2	01605 W/H 01606

Slug Devil Blacksmith's Double Face Sledge No. 84AX

Wgt.	Lgth.	Eye No.	Eye Size	Handle Length	A.R.E.A. Plan	Item No.	
						Hdld.	Head only
4 lbs.	5¼″	2	¾″ x 1″	15″		01202	01201
6 lbs.	6″	2	1″ x 1¼″	36″	No. 13	01204	01203
8 lbs.	6½″	2	1″ x 1¼″	36″	No. 13	01206	01205
10 lbs.	7″	2	1″ x 1⅜″	36″	No. 13	01208	01207
12 lbs.	7½″	2	1″ x 1⅜″	36″	No. 13	01210	01209
16 lbs.	8¼″	2	1″ x 1⅜″	36″		01212	01211

WARREN SPECIAL QUALITY CARBON TRACK TOOLS

Wear Safety Goggles

Square Flatters No. 164

Size	Weight	Eye No.	Size	Handle Length	Item No. Hdld.	Item No. Head Only
3″	5 lbs.	3	¾″ x 1⅜″	24″	05406	05405

Double Point Clay Pick No. 5-E

High carbon steel. No. 6 eye. Slip-on type handle.

Weight	Length	Item No.
7 lbs.	25″	00106

Five to a shipping carton.

Full Head Adze No. 13A

Slip-on type handle.

Weight	Length	Eye No.	Eye Size	Handle Length	Size Blade or Bit	A.R.E.A. Plan	Item No.
6 lbs.	12″	11	1¾″ x 2″	34″	4″ x 9″	No. 12-62	05001

A.R.E.A. Claw Bar No. 43A

Weight	Length	Spike Size	A.R.E.A. Plan	Pcs. Per Std. Pkg.	Item No.
27 lbs.	60″	9/16″ or ⅝″	No. 11-62	2	02301

Diamond Point Lining Bars No. 42

Weight	Length	Stock Size	A.R.E.A. Plan	Pcs.	Item No.
18 lbs.	60″	1¼″	No. 5	4	02201
26 lbs.	66″	1½″	No. 5	3	02203

WARREN SPECIAL QUALITY CARBON TRACK TOOLS

Wear Safety Goggles

Rail Fork No. 158

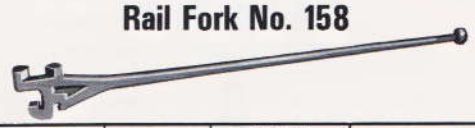

Weight	Length	A.R.E.A. Plan	Item No.
13 lbs.	40″	No. 10-62	06201

Standard Pattern Spike Maul No. 100

Weight	Length	Eye No.	Eye Size	Handle Length	Small Face	Large Face	Item No. Hdld.	Item No. Head Only
8 lbs.	12″	2	1″ x 1⅜″	36″	¾″	1½″	01502	01501
10 lbs.	12¾″	2	1″ x 1⅜″	36″	1″	1¾″	01504	01503

Bell Pattern Spike Maul No. 101

Wgth.	Lgth.	Eye No.	Eye Size	Handle Length	Small Face	Large Face	A.R.E.A. Plan	Item No. Hdld.	Item No. Head Only
10 lbs.	15″	2	1″x1⅜″	36″	1¼″	1⅝″	No. 3 Design 2	01602	01601

"V" Tamping Pick No. 10F

Weight	Length	Eye No.	Handle Length	A.R.E.A. Plan	Item No.
8 lbs.	24½″	6	36″	No. 2	00220

4 Knob Spike Puller No. 149

Weight	Length	Max. Jaw Opening	A.R.E.A. Plan	Item No.
2½ lbs.	12″	¾″	No. 9	05101

Round Track Punch No. 156

Alloy steel.

Weight	Lgth.	Eye No.	Eye Size	Handle Length	Size Punch	A.R.E.A. Plan	Item No. Hdld.	Item No. Head Only
5½ lbs.	13″	3	¾″ x 1⅜″	24″	11/16″ Rd.	No. 19	05502	05501

WARREN OPEN HEARTH CARBON TRACK TOOLS

Rail Tong No. 151

Weight	Distance across handles	Max. Jaw Opening	A.R.E.A. Plan	Pcs. Per Std. Pkg.	Item No.
18 lbs.	44″	3¾″	No. 6	2	06301

Timber Tong No. 152

Weight	Distance across handles	Max. Jaw Opening	A.R.E.A. Plan	Pcc. Per Std. Pkg.	Item No.
12 lbs.	41¾″	15½″	No. 8	4	06302

One Man Tie Tong No. 152A

Weight	Max. Jaw Opening	A.R.E.A. Plan	Pcs. Per Std. Pkg.	Item No.
10 lbs.	15½″	No. 7	4	06303

Single End Track Wrenches No. 153

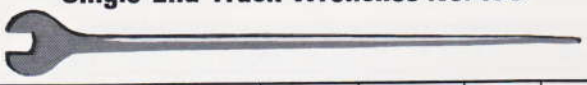

Weight	Length	Max. Jaw Opening	Size Bolt	A.R.E.A. Plan	Pcs. Per Std. Pkg.	Item No.
8 lbs.	30″	1 5/16″	¾″	No. 4	4	06001
10 lbs.	36″	1½″	⅞″	No. 4	4	06002
12 lbs.	42″	1 11/16″	1″	No. 4	4	06003
14 lbs.	48″	1⅞″	1⅛″	No. 4	4	06004
16 lbs.	48″	2 1/16″	1¼″	No. 4	4	06005
18 lbs.	54″	2¼″	1⅜″	No. 4	4	06006

Double End Track Wrenches No. 154

Weight	Length	Max. Jaw Opening	Size Bolt	A.R.E.A. Plan	Pcs. Per Std. Pkg.	Item No.
12 lbs.	42″	1½″ - 1 11/16″	⅞″ - 1″	No. 4	4	06102
14 lbs.	48″	1 11/16″ - 1⅞″	1″ - 1⅛″	No. 4	4	06103
15 lbs.	48″	1⅞″ - 2 1/16″	1⅛″ - 1¼″	No. 4	4	06104
16 lbs.	48″	2 1/16″ - 2¼″	1¼″ - 1⅜″	No. 4	4	06105

GRINDING INSTRUCTIONS

WARNING: ALWAYS WEAR SAFETY GOGGLES

WARNING: The redressing of tools having chipped or mushroomed heads or bits is not recommended for the average user. Trained personnel should be used and they should as a very minimum follow seven basic rules:

1. **RETIRE TOOLS THAT ARE BADLY CHIPPED OR MUSHROOMED.** Tools should be taken out of service at the first signs of chipping or mushrooming. If they are not, dangerous internal damage may have already resulted which normally can not be corrected in the redressing operation.
2. **RETURN THE TOOL TO ITS ORIGINAL SHAPE.** Use a new tool as a guide.
3. **REMOVE ALL CRACKS AND SPALLS.** Insure by Magnaglo, Magnaflux or dye testing.
4. **USE A MEDIUM OR FINE GRIT WHEEL.**
5. **KEEP THE GRINDING TEMPERATURE LOW.** Best accomplished by frequently removing the tool from the wheel.
6. **GRIND ALONG THE DIRECTIONAL LINES OF THE TOOL.**
7. **ALWAYS STRESS RELIEVE AFTER REDRESSING.** A temperature of 500° for one hour is satisfactory for all our track tools.

SPIKE MAUL — Grind off all moved metal and spalled areas returning to original shape. Crown each face 1/16″ to the center. Grind a generous ¼″x45° bevel around each face. **USE MAULS ONLY FOR DRIVING SPIKES.** Never strike one maul against another. Never use a maul on a track chisel or for general sledging.

TRACK CHISEL

BIT: Grind dull or chipped bits to fit grinding gauge on an emery wheel, taking utmost care not to overheat.

HEAD: Grind off all moved metal and spalled areas, returning to original shape. Crown face ⅛″ to the center. Grind a generous ¼″x45° bevel around the face. **USE TRACK CHISELS ONLY FOR CUTTING RAIL.** Dress bit often to prevent chipping. For best results strike with an 8# or 10# double face sledge, not exceeding 1/16″ per cut.

Approx. Weight	A	B
6 lb.	3″	2½″
8 lb.	3¼″	2¾″
10 lb.	3½″	3″
12 lb.	3¾″	3¼″
16 lb.	4⅛″	3⅝″

SLEDGES — Grind off all moved metal and spalled areas, returning to original shape. Crown each face ⅛″ to the center. Grind a generous ¼″x45° bevel around each face.

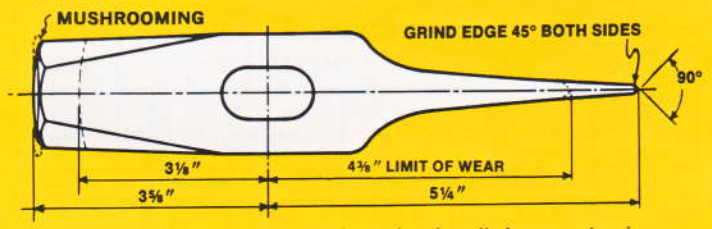

HOT CUTTER — Grind off all moved metal and spalled areas returning to original shape. Crown face ⅛″ to the center. Grind a generous ¼″x45° bevel around the face. Sharpen bit often to accomplish the same amount of work with lighter blows. **USE FOR HOT WORK ONLY.**

FIRST OPERATION
Grind all sides of head to original shape.

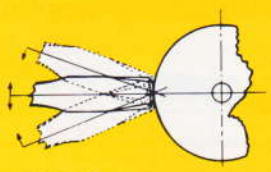

SECOND OPERATION
To crown face swing tool up and down, then rotate tool ⅛ turn and grind. Continue turning and grinding until face is smoothly crowned.

THIRD OPERATION
After grinding crown and sides, roll tool at 45° angle to grind bevel on head.

COLUMBIAN VISES

Vises in the Columbian line manufactured in our Cleveland, Ohio plant have many unique and exclusive features. Undoubtedly the most outstanding is the unconditional, lifetime guarantee on our Machinist's Vises. These vises are the *only* ones on the market with back jaw, front jaw, vise nut, and base plate all of malleable iron.

The same quality is built into the rest of the Columbian line. From the workshop, homeshop and Woodworker's vises you get quality that's dependable — easy to sell.

COLUMBIAN MACHINISTS VISES

GUARANTEED

Wear Safety Goggles

1. "T" section hardened tool steel faces pinned to jaw. Easily replaceable.
2. Malleable iron front jaw with heavy internal ribs for added strength. Guaranteed.
3. Steel handle balls forged from handle stock. Can't come loose.
4. Powerful cold-rolled steel screw.
5. Self-lubricating graphite bronze thrust bearing. Reduces friction. Prevents wear. Eliminates end play.
6. Front jaw beam covers and protects screw.
7. Longer back jaw body for perfect alignment. Malleable iron castings guaranteed.
8. Large ground and polished anvil.
9. Precision-machined nut and back jaw keyway guarantee positive alignment.
10. Malleable iron base. Guaranteed. Swivels full 360°.
11. Forged steel, tapered-gear lock bolt prevents slippage.

Columbian Replaceable Jaw Faces

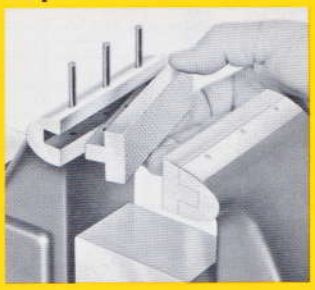

Hardened tool steel "T" jaw faces are anchored securely by drive pins. Can't come loose accidentally but are easily replaced. Solid gripping surface covers entire jaw face area. Smooth jaw faces available without screw heads or screw holes in gripping surface.

Columbian Swivel Base Kits

Columbian stationary base Machinists' Vises are easily converted to Swivel Base Vises by addition of the Columbian Swivel Kit. Swivel can be installed in 2 minutes. Kit includes swivel base, lock nut, lock bolt, center bolt, washer, bushing and plug cap. Danger of slipping is completely eliminated by forged steel, tapered-gear lock bolt.

Kit No.	Fits Vise No.	Weight	Item No.
563	503M2	4 lbs.	10601
563½	503½M2	5 lbs.	10602
564	504M2-504½M2	5 lbs.	10603
565	505M2	10 lbs.	10605
566	506M2	15 lbs.	10606
568	508M2	24 lbs.	10608

One in a carton

Columbian
Swivel Base Machinists' Vises

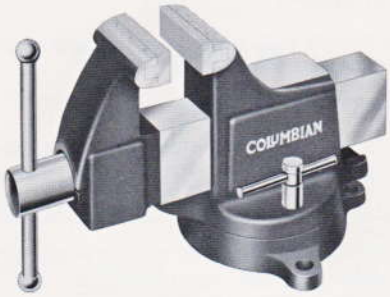

America's most popular machinists' vise. Swivels full 360°. Geared bolt and base plate afford positive lock against slippage. Malleable iron castings, guaranteed. Steel handle balls forged from handle stock. Self-lubricating graphite bronze bearing. Replaceable hardened tool steel "T" jaw faces, securely fastened with drive pins. No holes in gripping face. All sizes, except 6" and 8", have ground and polished anvil.

Vise No.	Jaw Width	Jaw Opening	Throat Depth	Weight	Item No.
603M2	3"	4"	3"	25 lbs.	10201
603½M2	3½"	5"	3¼"	35 lbs.	10202
604M2	4"	6"	3⅝"	43 lbs.	10203
604½M2	4½"	7"	4⅛"	57 lbs.	10204
605M2	5"	8"	4¼"	70 lbs.	10205
606M2	6"	10"	4⅜"	107 lbs.	10206
608M2	8"	12"	6"	184 lbs.	10208

One in a carton

Columbian
Stationary Base Machinists' Vises

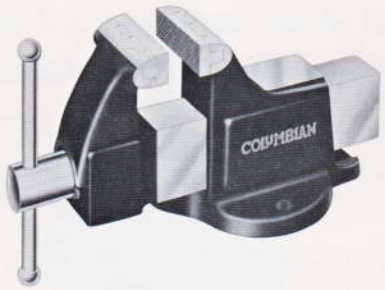

Flat base makes it unnecessary to cut bench. Malleable iron castings, guaranteed. Steel handle balls forged from handle stock. Self-lubricating graphite bronze bearing. Replaceable hardened tool steel "T" jaw faces, securely fastened with drive pins. No holes in gripping face. All sizes, except 6" and 8", have ground and polished anvil.

Vise No.	Jaw Width	Jaw Opening	Throat Depth	Weight	Item No.
503M2	3"	4"	3"	21 lbs.	10101
503½M2	3½"	5"	3¼"	30 lbs.	10102
504M2	4"	6"	3⅝"	38 lbs.	10103
504½M2	4½"	7"	4⅛"	49 lbs.	10104
505M2	5"	8"	4¼"	60 lbs.	10105
506M2	6"	10"	4⅜"	92 lbs.	10106
508M2	8"	12"	6"	160 lbs.	10108

One in a carton

All above FLC-2701

Columbian
Adjustable Jaw Swivel Base Vises

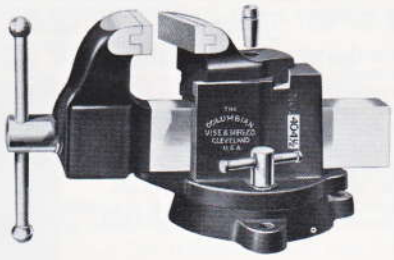

Ideal for wide range of work. Indispensable in tool room or shop. With pin in place, swivel back jaw is locked rigidly for use as parallel jaw vise. Removal of pin permits adjustment of back jaw to firm grip on irregular or tapering pieces. Malleable iron castings guaranteed. Steel handle balls forged from handle stock. Self-lubricating graphite bronze bearings. Hardened tool steel replaceable jaw faces.

Vise No.	Jaw Width	Jaw Opening	Throat Depth	Weight	Item No.
404½M2	4½"	6"	4⅛"	59 lbs.	10304

One in a carton

Columbian
Combination Pipe Swivel Base Vises

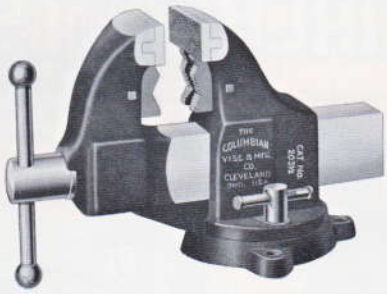

Tool steel pipe jaws heat treated to insure hardness and strength. 3 jaws are interchangeable; each has 2 working faces. Special pipe jaws design makes possible holding pipe down to ⅛ inch. Pipe jaws do not protrude beyond jaw faces. Other work can be held without removing pipe jaws. Malleable iron castings guaranteed. Steel handle balls forged from handle stock. Self-lubricating graphite bronze bearing.

Vise No.	Jaw Width	Jaw Opening	Throat Depth	Pipe Capacity	Weight	Item No.
203½M2	3½"	4"	4"	⅛"-2½"	38 lbs.	10403
204½M2	4½"	5"	5⅜"	⅛"-3½"	61 lbs.	10404
205M2	5"	6"	6¼"	⅛"-4½"	95 lbs.	10405
206M2	6"	10"	7⅛"	⅛"-6"	162 lbs.	10406

One in a carton

All above FLC-2701

Columbian Sheet Metal Workers' Vise No. 224½M2

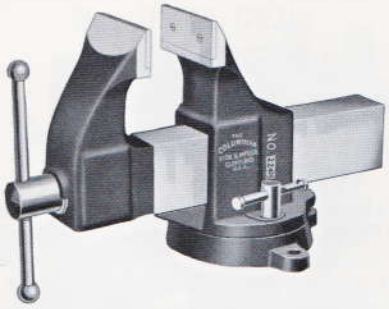

Specially designed for sheet metal work, wood working and body work. High tapering jaws with extra deep smooth faces. Malleable iron castings guaranteed . Replaceable steel jaw faces.

Vise No.	Jaw Width	Jaw Opening	Throat Depth	Weight	Item No.
224½M2	4½″	9″	5⅞″	63 lbs.	10504

One in a carton

FLC-2701

Smooth Jaw Faces for Columbian Machinists' Vises

Smooth jaw faces of hardened tool steel can be fitted to any Columbian Machinists' Vise where standard knurled faces would mar aluminum, other soft metals or polished surfaces. T-Section design provides solid gripping surface covering entire jaw face area. Smooth jaw faces are furnished at no additional charge on original vise orders.

Jaw Width	Item No.	Jaw Width	Item No.
3″	14501	4½″	14504
3½″	14502	5″	14505
4″	14503		

Columbian Copper Jaw Caps

Fit snugly over jaws and cover knurled steel faces to prevent marring of soft materials. Easily installed and removed.

Jaw Width	Item No.	Jaw Width	Item No.
3″	14401	4½″	14404
3½″	14402	5″	14405
4″	14403	6″	14406

Columbian Drill Press Vise No. 125

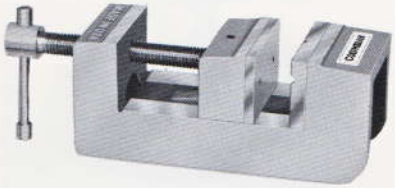

Efficient, multi-purpose vise for general work including drilling, tapping, grinding. Can be used on end, either side or in normal horizontal position. Body and moving jaw are high tensile cast iron. Precision squared sides. Precision-cut threaded steel lead screw. Grooved steel jaw for holding round or tapered pieces. Over-all length, 7¼ inches.

Vise No.	Jaw Width	Jaw Depth	Jaw Opening	Screw Dia.	Weight	Item No.
125	2½″	1½″	2½″	½″	4½ lbs.	10801

One in a carton

FLC 2701

Columbian Angle Vise No. 225

For drill press, milling machine, grinder and bench work. Makes quick, accurate setups without clamps or wedges. Adjusts to any angle, 0° to 90°. Can be used as ordinary vise when horizontal. Accurately graduated for all angles. Grooved steel jaw for holding round or tapered pieces. Steel, adjustable support screws. Over-all length, 9 inches.

Vise No.	Jaw Width	Jaw Depth	Jaw Opening	Screw Dia.	Weight	Item No.
225	2½″	1½″	2½″	½″	8 lbs.	10802

One in a carton

FLC 2701

Columbian Hinged Pipe Vises "Long Jaw"

Hold pipe, conduit and thin wall tubing firmly without bending. Long-bearing heat-treated tool steel jaws prevent crushing and scoring.
Lower pipe jaws, milled on both sides for double life, are securely fastened from top and reversed without removing vise from bench. Handy bender for small pipe, conduit tubing.

Vise No.	Pipe Capacity	Weight	Item No.
160M2	⅛″ - 2″	8 lbs.	10902
161M2	⅛″ - 2½″	11 lbs.	10903
162M2	⅛″ - 3½″	17 lbs.	10904
163M2	⅛″ - 4½″	26 lbs.	10905

One in a carton

Columbian Hinged Pipe Vises "Interlocking Jaw"

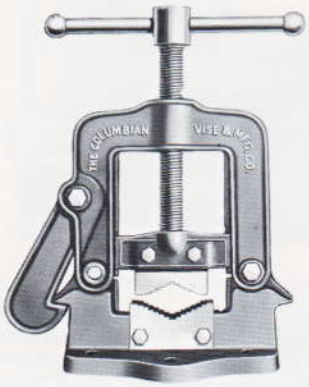

Replaceable tool steel pipe jaws, accurately milled and heat-treated for positive gripping and maximum life. Heavy-duty sizes have extra strength required for holding large-diameter work.

Vise No.	Pipe Capacity	Weight	Item No.
164M2	⅛″ - 6″	37 lbs.	11001

One in a carton

All above FLC-2700

Columbian Drill Press and Milling Machine Vises

Eliminate need for special and expensive jigs and fixtures. Provide maximum clamping and holding power. Choice of plain or steel jaw faces. Acme-threaded, cold-rolled steel screw. Swivel crank handle drops out of way. 4 keyslots provide precision mounting. All parts replaceable and interchangeable.

Vise No.	Jaw Width	Jaw Depth	Jaw Opening	Jaw Style	Screw Diam.	Weight	Item No.
1513½	3½″	1⅞″	4½″	Plain	¾″	17½ lbs.	10713
1523½	3½″	1⅞″	3¾″	Steel	¾″	19 lbs.	10723
1515	5″	2″	6⅞″	Plain	⅞″	29½ lbs.	10715
1525	5″	2″	6″	Steel	⅞″	32 lbs.	10725

One in a carton

FLC 2701

Columbian Bench Anvil No. 9A

Broad, tough face. Ideal for many jobs.

Anvil No.	Face	Horn	Base	Weight	Item No.
9A	3″ x 6″	3″	4″ x 5½″	9 lbs.	11701

Individual cartons

Columbian Clamp Vise No. 235

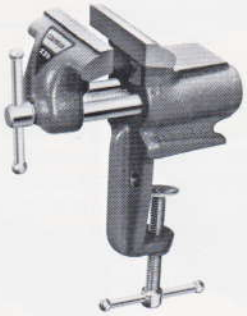

Ideal for home shop or serviceman. Fits bench, table or block up to 2¼ inches thick. Fully-machined jaws. Smooth faces. V groove jaws for holding rounds. Accurately threaded steel screw located below guide rods so work resting on rods cannot touch screw. Handy anvil.
Gray and bright-plated finish.

Vise No.	Jaw Width	Jaw Depth	Jaw Opening	Weight	Item No.
235	3″	1½″	2⅜″	3½ lbs.	11523

Individual cartons. 10 cartons to a case.

FLC-2701

Columbian Homeshop Vises Nos. D33½, D63½

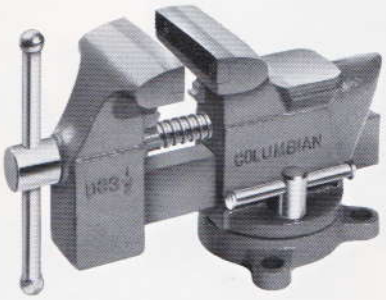

Extra heavy steel beam. Balanced castings for super strength. Extra large back jaw anvil and anvil horn. Cold-rolled steel screw. Slip-proof collar and spring clip. Handle balls forged from handle stock. 3-point "Tri-Grip" permanent pipe jaws. Positive locking swivel base, with slip-handle lock nut. Polished jaws and anvil, bright red finish.

Vise No.	Jaw Style	Jaw Width	Jaw Opening	Pipe Capacity	Weight	Item No.
D33½	Steel	3½"	4"	⅛" - 1¼"	13 lbs.	11333
D63½	Plain	3½"	4"	⅛" - 1¼"	13 lbs.	11363

Individual cartons. 5 cartons in a case.

Columbian Workshop Vises No. D43½, D44, D45

Heavy-duty channel steel front jaw beam covers screw. Extra large back jaw anvil and anvil horn. Cold-rolled steel screw. Handle balls forged from handle stock. Replaceable malleable iron nut, Acme thread. Replaceable heat-treated steel jaw faces. Permanent pipe jaws, positive "Tri-Grip" design. Positive locking swivel base, slip-handle lock nut. Polished jaws and anvil, bright red finish. Screw handle and lock nut, bright zinc plated.

Vise No.	Jaw Width	Jaw Opening	Pipe Capacity	Weight	Item No.
D43½	3½"	4"	⅛" - 1¼"	16 lbs.	11103
D44	4"	5"	⅛" - 2"	27 lbs.	11104
D45	5"	6"	⅛" - 2½"	38 lbs.	11105

Individual cartons. D43½ packed 5 in case.
D44 packed 1 in case. D45 packed 1 in case.

Columbian Homeshop Vises Nos. 03½M2, 04

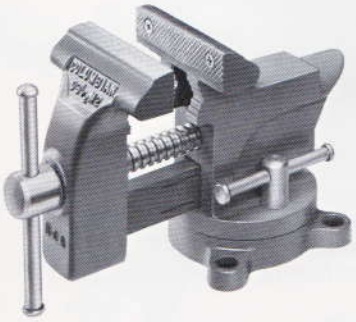

Outstanding values. Sturdy, reliable, inexpensive. Replaceable faces. Handle balls forged from handle stock. Cold forged steel screw. Positive locking swivel base. Large anvil and horn. Polished jaws. Permanently cast pipe grips.

Vise No.	Jaw Width	Jaw Depth	Jaw Opening	Pipe Capacity	Weight	Item No.
03½M2	3½"	2 5/16"	3"	⅛" - 1¼"	9½ lbs.	11403
04	4"	2¼"	4"	⅛" - 1¼"	13 lbs.	11404

Individual cartons. 03½ packed 10 in case. 04 packed 5 in case.

Columbian Carpenter's Vise No. 1655

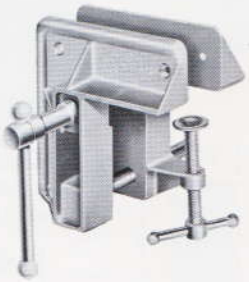

Clamps on anything, including 2¼ inch bench. Cast aluminum alloy jaws open 3½ inches to hold 2 x 4. Cold-rolled steel feed screws and guide pin. Easily carried in carpenter's kit. Smooth jaw faces. Drilled for wood faces.

Vise No.	Jaw Size	Jaw Opening	Weight	Item No.
1655	5" x 5"	3½"	2¾ lbs.	11605

One in a box. 6 to a carton. **All items FLC 2701**

COLUMBIAN WOODWORKERS' VISES

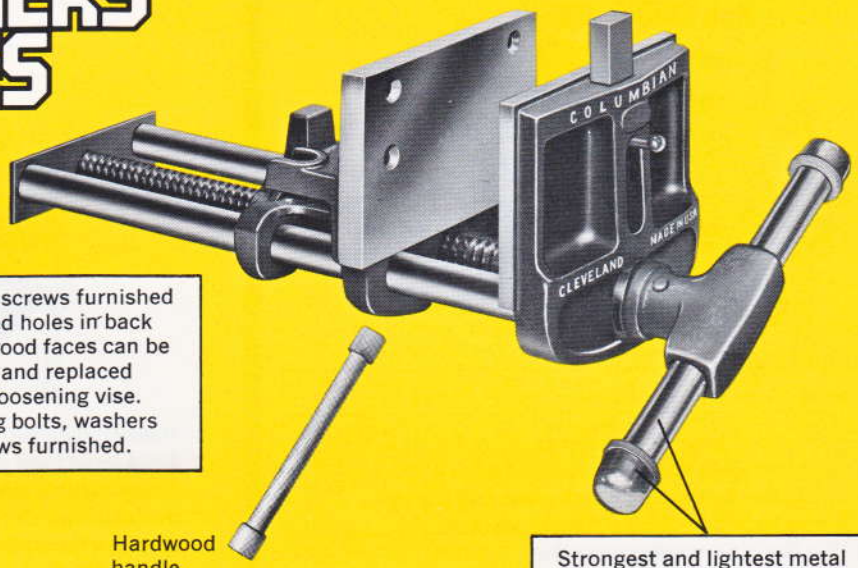

Machine screws furnished for tapped holes in back jaw, so wood faces can be installed and replaced without loosening vise. Mounting bolts, washers and screws furnished.

Hardwood handle.

Strongest and lightest metal handles, zinc-coated tubular steel. Won't stain hands or work. Polyethylene washers never crack.

Slotted mounting brackets reduce installation time.

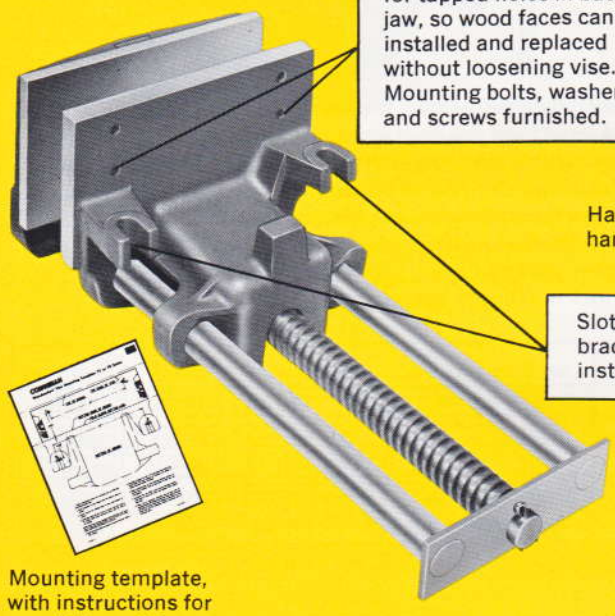

Mounting template, with instructions for pre-drilling all 4 mounting holes.

Wear Safety Goggles

Choice of 2 Continuous Screw Mechanisms

Rapid Acting . . . for fast and frequent changes in jaw opening

counter-clockwise operation

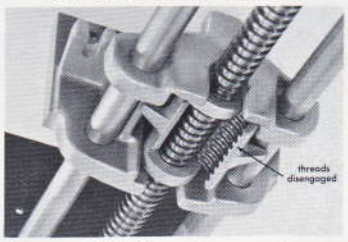

clockwise operation

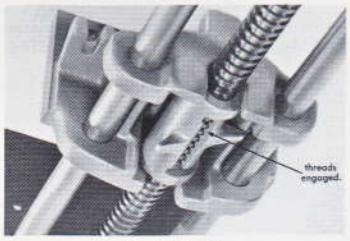

"Power-Slide" mechanism incorporates a controlled friction clutch. Counter-clockwise operating disengages threads, permits fast jaw movement. Clockwise operation engages threads, producing continuous jaw movement and high pressure non-slip holding power.

Solid Nut . . . for maximum strength and longest life

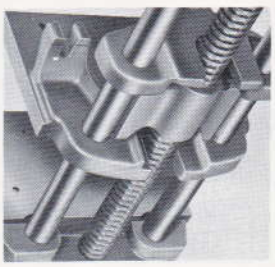

solid nut

Double lead thread provides maximum speed of operation with solid nut.

Columbian Rapid Acting Continuous Screw Woodworkers' Vises

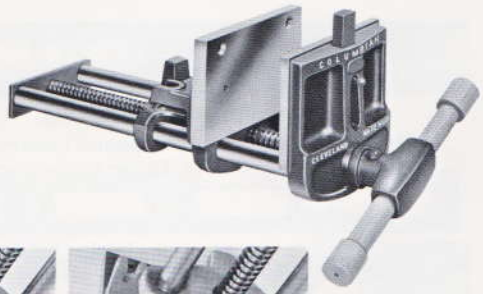

Rapid Acting

For use where changes in jaw openings must be made frequently and fast. Clockwise operation engages "Power-Slide" mechanism with continuous thread screw for unrestricted inward motion and holding power. Counter-clockwise operation disengages mechanism for "fast sliding" adjustment of jaw opening. Vises furnished with dog type front jaw for use with bench stops.

Vise No.	Jaw Size	Jaw Opening	Handle Type	Weight	Item No.
7RDW	4" x 7"	9"	Wood	27 lbs.	11801
7RDT	4" x 7"	9"	Steel	28 lbs.	11802
10RDW	4" x 10"	12"	Wood	33 lbs.	11811
10RDT	4" x 10"	12"	Steel	34 lbs.	11812

Columbian Solid Nut Continuous Screw Woodworkers' Vises

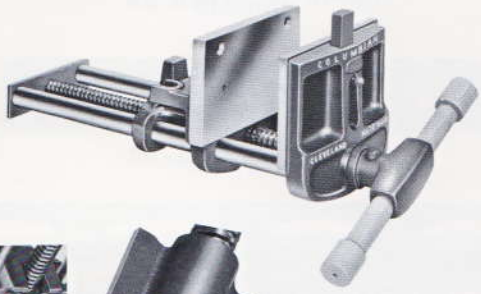

Solid Nut

For general industrial and school woodworking. Heavy steel screw with double lead; fast running thread provides maximum operating speed. Solid nut assures long, repair-free life. Vises furnished with dog type front jaw for use with bench stops.

Vise No.	Jaw Size	Jaw Opening	Handle Type	Weight	Item No.
7CDW	4" x 7"	9"	Wood	27 lbs.	11901
7CDT	4" x 7"	9"	Steel	28 lbs.	11902
10CDW	4" x 10"	12"	Wood	33 lbs.	11911
10CDT	4" x 10"	12"	Steel	34 lbs.	11912

Columbian Woodcraft Vise No. 6CM2

Perfect for homeshop. Fabricated steel jaws. Zinc plated cold-rolled steel screw and screw head. Malleable iron nut. Bright zinc plated steel handles with balls forged from handle stock. Holes for wood faces. Fits bench up to 2¼ inches.

Vise No.	Jaw Size	Jaw Opening	Weight	Item No.
6CM2	3" x 6"	7"	10 lbs.	12202

One in a carton

Columbian Woodcraft Vise No. 6CD M2

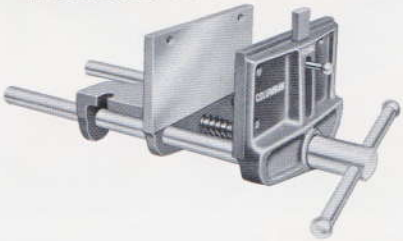

Dog in front jaw. Strong cast iron jaws. Cold-rolled steel screw, screw head. Zinc-plated steel handles with balls forged from handle stock. Holes for wood faces. Fits bench up to 2¼ inches.

Vise No.	Jaw Size	Jaw Opening	Weight	Item No.
6CDM2	3" x 6"	7"	10 lbs.	12201

One in a carton

Columbian "Wide-Side" Vise

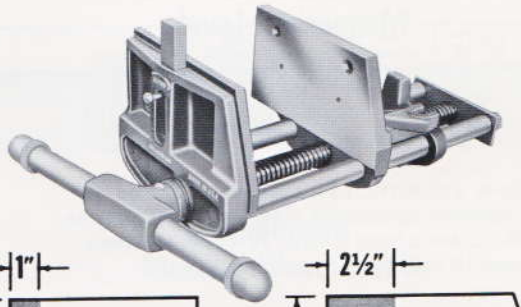

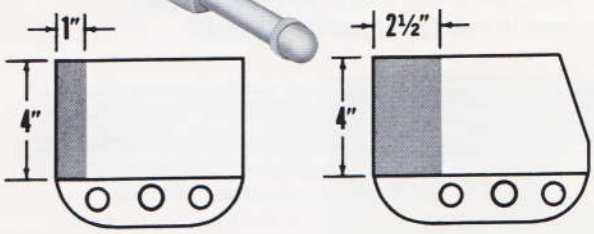

Conventional 7" Vise **Columbian 7" "Wide-Side"**

7 inch Woodworkers' Vises with 2½ inch clamping area on the left side where it is needed most. Clamping area is 2½ times that of conventional 7 inch Woodworkers' Vises. Dog type front jaw for use with bench stops.

Vise No.	Jaw Size	Jaw Opening	Nut Type	Handle Type	Weight	Item No.
V-7RDT	4" x 7"	9"	Rapid Act.	Steel	30 lbs.	12102

All items FLC-2701

Columbian Levels gives you a broad range to choose from (Aluminum, Magnesium and Wood) to meet most conditions and requirements.

Columbian ProCraft Magnesium Levels

Made with extruded magnesium I-beams. Extremely lightweight. Easier to carry and use. 48 in. levels have 6 vials, 72-78-96 in. levels have 10 vials.

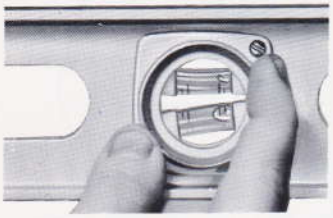

A single 2-piece vial assembly attaches to each side of level. Exclusive Columbian design can be tightened without disturbing adjustment. Vials can be adjusted and locked for any pitch or angle. For vial assembly, specify No. 701A.

Level No.	Size	No. Plumbs	No. Levels	Weight	Item No.
748	1⅛″ x 2⅝″ x 48″	4	2	3¼ lbs.	13506
772	1⅛″ x 2⅝″ x 72″	6	4	5 lbs.	13507
778	1⅛″ x 2⅝″ x 78″	6	4	5¼ lbs.	13508
796	1⅛″ x 2⅝″ x 96″	6	4	6½ lbs.	13509

Wear Safety Goggles

Columbian Extruded Magnesium Levels

Made with extruded magnesium I-beams. Extremely lightweight. Easier to carry and use.

Implex holders with catseye vials and Plexiglas lens attached to each side of level. Implex prongs spread for vial insertion and spring back to hold vial securely. Will not come loose in roughest service. For vial assembly, specify No. A-1.

Level No.	Size	No. Plumbs	No. Levels	Weight	Item No.
1724	1⅛″ x 2⅝″ x 24″	4	2	1¾ lbs.	13603
1728	1⅛″ x 2⅝″ x 28″	4	2	2 lbs.	13604
1730	1⅛″ x 2⅝″ x 30″	4	2	2¼ lbs.	13605
1748	1⅛″ x 2⅝″ x 48″	4	2	3¼ lbs.	13606

Columbian ProCraft Aluminum Levels

No. 518

No. 518A, No. 524A

No. 524, No. 528, No. 530, No. 548

Special aluminum alloy castings provide maximum strength and easy handling. Machined on all sides. Edges filed smooth. Metallic-seal vials with catseye fluid solid-set for permanent accuracy. Vials protected on both sides by extra heavy glass lenses.

Level No.	Size	No. Plumbs	No. Levels	No. 45° Vials	Weight	Item No.
518	1″ x 2¼″ x 18″	2	2	0	1½ lbs.	13002
518A	1″ x 2¼″ x 18″	1	2	1	1½ lbs.	13012
524A	1″ x 2¼″ x 24″	1	2	1	2 lbs.	13013
524	1″ x 2¼″ x 24″	4	2	0	2 lbs.	13003
528	1″ x 2¼″ x 28″	4	2	0	2½ lbs.	13004
530	1″ x 2¼″ x 30″	4	2	0	2⅝ lbs.	13005
548	1″ x 2¼″ x 48″	4	2	0	3½ lbs.	13006

All Items FLC-2720

Columbian Die Cast Aluminum Levels

No. 4518, No. 4524

No. 6524, No. 6528

Outstanding value. Top quality, full size, die cast frames. Attractive blue, bright machined edges. Readings from either edge. Solid-set catseye metallic-sealed vials protected on both sides by heavy glass lenses.

Level No.	Size	No. Plumbs	No. Levels	Weight	Item No.
4518	1″ x 2⅛″ x 18″	2	2	1 lb.	13102
4524	1″ x 2⅛″ x 24″	2	2	1½ lbs.	13103
6524	1″ x 2⅛″ x 24″	4	2	1½ lbs.	13113
6528	1″ x 2⅛″ x 28″	4	2	1¾ lbs.	13114

Columbian Extruded Aluminum Levels

No. A2418, No. A2424

No. A3424

No. A3624, No. A3628, No. A3648

Made with anodized I-beam of extruded aluminum. Vials are securely held by shock-proof Implex vial holders with Plexiglas lens. Will not come loose in roughest service. Top value at economy price. For vial assembly, specify No. A-1.

Level No.	Size	No. Plumbs	No. Levels	Weight	Item No.
A2418	¾″ x 2⅛″ x 18″	2	2	¾ lb.	13402
A2424	¾″ x 2⅛″ x 24″	2	2	1 lb.	13403
A3424	¾″ x 2⅛″ x 24″	2	2	1 lb.	13413
A3624	¾″ x 2⅛″ x 24″	4	2	1 lb.	13423
A3628	¾″ x 2⅛″ x 28″	4	2	1¼ lbs.	13424
A3648	¾″ x 2⅛″ x 48″	4	2	2 lbs.	13426

Columbian Die Cast Torpedo Levels No. 39, No. 39M

Lightweight. Hand-fitting. Die cast. Attractive blue frame. Ideal for plumbers, mechanics, electricians, home craftsmen. Precision grooved base for aligning on pipe or shafting. Packaged in clear plastic pouch for pegboard display. No. 39M has magnetic base.

Level No.	Size	No. Plumbs	No. 45° Vials	No. Levels	Weight Per 10	Item No.
39	⅝″ x 1⅛″ x 9″	1	1	1	3 lbs.	13201
39M	⅝″ x 1⅛″ x 9″	1	1	1	3 lbs.	13211

10 in a carton

Columbian ProCraft Torpedo Level No. 339

Die cast. Unusually accurate and shock resistant. 1 plumb, 1 level, 1-45° vial. Bottom of aluminum body precision-grooved for aligning on pipe or shafting. 9 in. long, 1⅛ in. high, only ⅝ in. wide at widest point. Perfect for carrying in pocket. Individually packaged in clear plastic sleeves for pegboard display.

Level No.	Size	No. Plumbs	No. 45° Vials	No. Levels	Weight Per 10	Item No.
339	⅝″ x 1⅛″ x 9″	1	1	1	3 lbs.	13221

10 in a carton

Columbian Masons' Wood Levels

6 vials . . . oval lens . . . open grip
Brass Bound—5648BB

Easy-to-read metallic-sealed vials are protected with heavy glass lenses. Mahogany is genuine top stock, carefully selected and kiln-dried. Brass bound levels have precision-rolled, double-angle, channel grip, screwless binding that cannot come loose, assures maximum accuracy and long life. All levels are 1⅛ x 2⅜ x 48 in.

Level No.	Wood Stock	No. Plumbs	No. Levels	Weight	Item No.
5648BB-brass bound	mahogany	4	2	4¼ lbs.	13726

All items FLC-2720

COLUMBIAN VISES

Easy Comparison Reference Charts

COLUMBIAN Vise catalog numbers and the catalog numbers of similar sizes and types of other manufacturers. Jaw widths are in inches and the closest corresponding size has been used in each case.

Jaw Width	COLUMBIAN	American	Athol	Hollands	Morgan	Parker	Prentiss	Reed	Simplex	Wilton	Yost
Machinists' Vises/Stationary Jaw/Stationary Base											
3	503M2	51	923	13	30	953	253	103R	31P	300N	103
3½	503½M2	52	923½	13½	35	953½	253½	103½R	33P	350N	103½
4	504M2	53	924	14	40	954	254	104R	41P	400N	104
4½	504½M2	54	924½	14½	45	954½	254½	104½R	43P	450N	104½
5	505M2	55	925	15	50	955	255	105R	51P	500N	105
6	506M2	56	926	16	60	956	256	106R	61P	600N	106
8	508M2	58	....	18	80	958	....	108R	81P	....	108
Machinists' Vises/Stationary Jaw/Swivel Base											
3	603M2	61	923	23	130	973	263	203R	31S	300S	203
3½	603½M2	62	923½	23½	135	973½	263½	203½R	33S	350S	203½
4	604M2	63	924	24	140	974	264	204R	41S	400S	204
4½	604½M2	64	924½	24½	145	974½	264½	204½R	43S	450S	204½
5	605M2	65	925	25	150	975	265	205R	51S	500S	205
6	606M2	66	926	26	160	976	266	206R	61S	600S	206
8	608M2	68	....	28	180	978	....	208R	81S	....	208
Machinists' Vises/Adjustable Jaw/Swivel Base											
4½	404½M2	77	644½	44½	345	384½	454½	404½R	41SJ	450SJ	....
Combination Pipe Vises											
3½	203½M2	22	323½	....	87	433½	353½	1C	CP33	C-0	31C
4½	204½M2	23	324½	53½	88	434½	354½	2C	CP43	C-1	32C
5	205M2	24	325	54	288½	435	355	3C	....	C-2	33C
6	206M2	25	326	56	289½	436	356	4C	CP61	C-3	34C
Sheet Metal Workers' Vise											
4½	224½M2	206	424½	264½	138	674½	....	224½R	42CPS	....	503

Hinged Pipe Vises

Standard Vises					
Capacity*	⅛ — 2	⅛ — 2½	⅛ — 3½	⅛ — 4½	⅛ — 6
Columbian	**160M2**	**161M2**	**162M2**	**163M2**	**164M2**
American	2	3	4	5	....
Armstrong	70	71	72	73	74
Athol	212	212½	213½	214½	216
Capewell	232	233	234	135	136
Erie	0H	1H	2H	3H	4H
Hollands	01	02	03	04	64
Morgan	2M	4M	6M	8M	....
Nye	N0	N1	N2	N3	....
Parker	180	181	182	183	....
Prentiss	190	191	192	193	....
Reed	0	1	2	3	64
Rigid	21	22	24	26	27
Simplex	12	12½	13½	14½	....
Toledo	....	22	....	25	....
Wilton	52	53	54	55	....
Yost	....	51	52	53	64

*Variations listed under nearest standard specification.

Woodworkers' Vises

Columbian NEW	Abernathy	Morgan	Parker	Prentiss	Reed	Richard Wilcox	Simplex	Wilton	Yost
7RDW **7RDT**	70D	.... 100A-18A	445W	335W	7QD	430S-1	W-7 W-7-T	53W 53A	405 ....
10RDW **10RDT**	80D	.... 200A-28A	446W	336W	10QD	430S-2	W-10 W-10-T	64W 64A	400 ....
7CDW **7CDT**	S70D	.... 10A	25W 25S	15W	7D	630S-1	W-7-CD W-7-CDT	51W 51A	....
10CDW **10CDT**	S80D	.... 20A	26W 26S	16W	10D	630S-2	W-10-CD W-10-CDT	62W 62A	....
V7RDT	....	315A	....	....	....	....	VL-7-RT	67A	....

HARGRAVE TOOLS

From our plant in Cincinnati, Ohio we can provide you with the world's largest selection of clamps. The Hargrave line extends from the simple Spring Clamp with 18 lbs. pressure to the #40 Forged Steel Super Clamp that will handle a 40,000 lb. test load. With the Hargrave line, you'll be able to offer customers just the right clamp for the job.

Hargrave also manufactures a complete line of quality chisels, punches and masonry drills, to simplify your ordering and stocking procedures.

Hargrave Spring Clamp

Heavy gage steel shaped to provide easy hand grip. Enamel finished high grade tempered steel spring holds firmly without marring finish. Can be applied or removed instantly.

No.	Max. Opening	Lgth., In.	Quan., per Box	Wt., lbs. per Box	Clamping Pressure in Lbs.	
					Opening, In.	Reg. Spring
No. 1	1″	4	12	1½	1	27
					Half Open	18
No. 2	2″	6	12	4⅜	2	40
					Half Open	22
No. 3	3″	9	6	4½	3	80

Hargrave Forged Steel Superclamp No. 44

Patented process frame is high strength heat treated steel. Handle is sliding pin (vise-type). Large diameter screws run full length in all sizes, and are specially treated to prevent bending and damage to threads.

Opening, Inches	*Depth, Inches	Screw Diameter	Test Load, Pounds	Wt., lbs.	Item No. #44P
**1	1	⅜″	1,800	1½ per Box	21101
**1½	1⅜	⅜″	2,000	3 per Box	21102
**2	1¾	½″	2,700	6 per Box	21103
**3	2¼	½″	3,000	9 per Box	21104
**4	2½	⅝″	3,700	13½ per Box	21105
**6	3⅛	⅝″	4,500	21 per Box	21106
8	3¾	¾″	5,200	5¾ Each	21107
10	4	⅞″	6,600	7⅞ Each	21108
12	4¼	⅞″	8,000	9½ Each	21109

*Depth is from center of screw to frame.
**Packed 6 per box. Other sizes in bulk.
Conforms to Fed. Spec. GGG-C-406C, Style 1-Type 1, Class A-Grade A. Forged frame, light service.

All above FLC-2702

Hargrave Super Junior Clamps

No. 51-P

No. 55-P

Forged steel, heat-treated frames make Super-Junior Clamps much stronger than ordinary pressed steel, malleable, aluminum or other cast clamps. Steel screws are plated for longer life. Super Junior "C" Clamps give more strength, longer life and greater value for all classes of work.

Number	Opening, Inches	*Depth, Inches	Quantity, per Box	Wt., lbs., per Box	Item No.
50	1	1	12	1½	21301
51	1	1½	12	2⅛	21302
52	1¼	1¼	12	2⅜	21303
53	1½	1½	12	3⅜	21304
54	2	1¼	6	2⅛	21305
55	3	1⅜	6	3⅜	21306
56	2½	2½	6	4¼	21307

*Depth is from center of screw to frame.

Hargrave Standard Carriage Clamp No. 540

Frames of 3" through 8" made from Pearlitic malleable for greatest strength. Other sizes made of high-grade malleable. Superior design provides sliding pin (vise-type) handle, single 'Acme' thread screw and steel oscillating ball and socket tip. Frame shaped for greatest strength for weight. (#540-W with wing handle forged integral with screw, available in 4" and 6" sizes *only*).

Opening, Inches	*Depth, Inches	Screw Diameter	Test Load, Pounds	Quantity, per Box	Wt., lbs., per Box	Item No. 540-P	Item No. 540-W
2½	1¾	½"	1,100	6	5½	22001	
3	1⅞	½"	1,800	6	6¼	22002	
4	2 1/16	⅝"	2,150	6	11	22003	22013
5	2½	⅝"	2,250	6	14	22004	
6	2¾	⅝"	2,450	6	17	22005	22015
8	3¼	¾"	2,750	1	4	22006	
10	3⅝	⅞"	2,250	1	7¼	22007	
12	3⅝	⅞"	2,850	1	8½	22008	
14	3¾	⅞"	2,850	1	9¼	22009	

*Depth is from center of screw to frame.

Hargrave Deep General Purpose Body Clamp No. 400

Steel frame, drop forged and heat-treated for maximum strength. Specially treated screw prevents bending and battering of threads. Sliding pin (vise-type) handle and steel ball and socket tip.

Maximum Opening	Minimum Opening	*Depth, Inches	Screw Diameter	Test Load, Pounds	Wt., lbs., Each	Item No. #400
2"	0	2	½"	3,300	1	20301
3"	0	2⅜	½"	3,500	1½	20302
4"	0	2¾	⅝"	4,100	2⅛	20303
6"	0	3⅝	¾"	5,400	4⅛	20304
8"	2"	4½	⅞"	5,900	6	20305
10	3"	5⅜	⅞"	6,200	8¾	20306
12"	4"	5¾	⅞"	9,300	11	20307

*Depth is from center of screw to frame. Packed one clamp per box. Conforms to Fed. Spec. GGG-C-406C, Style 2, Type 1, Class A, Grade A.

Hargrave Deep Clamp No. 573

A medium weight clamp similar to standard clamp but with deeper reach. Strong, malleable frame, steel screw with forged wing handle and oscillating (ball and socket) steel tip — put on to stay.

Opening, Inches	*Depth, Inches	Screw Diameter	Wt., lbs., Each	Item No.
3½	4½	⅝"	2¼	26301
4½	4½	⅝"	2¾	26302
6½	4½	⅝"	3¾	26303

*Depth is from center of screw to frame.

Hargrave Deep Reach Superclamp No. 48

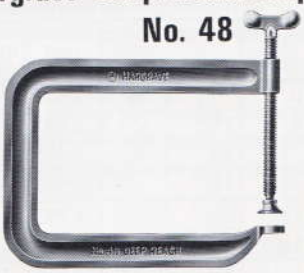

Forged steel frame and unique design makes this an excellent clamp for deep reach, medium service.

Opening, Inches		*Depth, Inches	Size Steel, Inches	Screw Diameter	Test Load, Pounds	Wt., lbs., Each	Item No.
6	x	8	½ x 2	⅝"	2,200	8¾	21201
8	x	12	½ x 2	¾"	1,800	11½	21202
12	x	16	⅝ x 2	⅞"	1,500	19½	21204

*Depth is from center of screw to frame.
Conforms to Fed. Spec. GGG-C-406C, Style 2, Type 1, Class B, Grade A, forged frame, medium service.

All above FLC-2702

Hargrave Medium Service Forged Steel Superclamp No. 42

Patented frames are high strength, heat-treated steel. Large diameter screws are specially hardened to prevent bending and protect threads. Clamp strength exceeds test loads listed below. Sliding pin (vise-type) handle, oscillating ball and socket steel tip.

Maximum Opening	Minimum Opening	*Depth, Inches	Screw Diameter	Test Load, Pounds	Wt., lbs., Each	Item No.
4″	0	2½	¾″	10,000	4½	21001
6″	2⅝″	2¾	¾″	11,250	5⅝	21002
8″	4 11/16″	2¾	¾″	12,500	6⅛	21003
12″	8 11/16″	3	⅞″	15,000	8⅞	21005

*Depth is from center of screw to frame.
Conforms to Fed. Spec. GGG-C-406C, Style 1, Type 1, Class B, Grade A, forged frame, medium service.

Hargrave Heavy Service Forged Steel Superclamp No. 40

Frame is forged high strength, heat-treated steel. Large diameter screws are hardened steel to prevent bending, protects threads. Clamp strengths exceed test loads shown below. Full length screw available.

Stock No.	Max. Open.	Min. Open.	*Depth	Screw Dia.	Test Load Pounds	Wt., lbs., Each	Item No. 40
0	¾″	0	11/16″	⅜″	2,500	⅜	20201
1	1¼″	0	1⅛″	7/16″	5,600	¾	20202
1½	1¾″	¾″	1 9/16″	⅝″	8,750	1⅝	20203
2	2¼″	⅞″	1⅞″	¾″	12,500	3¾	20204
3	3¼″	1⅜″	2½″	⅞″	16,250	6½	20205
4	4½″	1½″	2¾″	⅞″	20,000	10	20206
5	5½″	2½″	3⅛″	⅞″	23,800	13	20207
6	6½″	1⅝″	3⅜″	1⅛″	27,500	17	20208
8	8½″	3⅝″	3¾″	1⅛″	31,250	24	20209
10	10½″	5⅝″	4⅛″	1⅛″	35,000	29	20210
12	12½″	7⅝″	4½″	1⅛″	40,000	40	20211

*Depth is from center of screw to frame.
Conforms to Fed. Spec. GGG-C-406C, Type 1, Class D, heavy service.

Hargrave Welders' Clamps Forged Steel

SOLID ALLOY SPATTER-RESISTING SCREWS

The screws of Nos. 41, 43 and 45 are made of special bronze alloy (solid, not plated or coated) that resists spatter. They are large in diameter to prevent bending or breaking. Oscillating (ball and socket) tip is steel — put on to stay. Frames are forged steel, and drilled for ground connections.

Regular Duty No. 41

Opening, Inches	*Depth, Inches	Screw Diameter	Test Load, Pounds	Wt., lbs., per Box	Item No.
3	2¼	⅝″	3,000	1¾	20502
4	2½	⅝″	3,700	2¼	20503
6	3⅛	¾″	4,500	3¾	20504

Packed 1 per Box.
*Depth is from center of screw to frame.

Heavy Duty No. 43

Max. Open.	Min. Open.	*Depth, Inches	Screw Dia.	Test Load, Pounds	Wt., lbs. per Box	Item No.
4″	0	2½	⅞″	10,000	4¾	20601
6″	0	2¾	1″	11,250	6¼	20602
8″	2 3/16″	2¾	1″	12,500	7⅛	20603
12″	5″	3	1⅛″	15,000	11	20605

Packed 1 per Box.
*Depth is from center of screw to frame.

Deep Reach No. 45

Opening, Inches	*Depth, Inches	Screw Diameter	Test Load, Pounds	Wt., lbs., per Box	Item No.
3	3	⅝″	2,700	2⅛	20702
4	4	⅝″	3,400	3½	20703

Packed 1 per Box.
*Depth is from center of screw to frame.

All above FLC-2702

Hargrave Cin-Craft Clamp Pressed Steel No. 300

Twice the Strength of Plain Malleable Clamps in Comparable Sizes.

Pressed steel frame with bright enamel finish. Screw, sliding pin handle and pressure tip bright plated. Ideal for home, farm, and small shop use.

Opening, Inches	*Depth, Inches	Quantity, per Box	Wt., lbs., per Box	Item No.
1	1⅛	12	1¾	26201
2	1	12	3¾	26202
2½	2½	6	5	26203
3	1½	6	4¼	26204

*Depth is from center of screw to frame.

Hargrave Small "C" Clamp Nos. 566, 568

Strong Malleable Frames and Steel Screws.
Used extensively in aircraft and many other industrial plants. Flat wing handle and tip. Natural finish.

No.	Opening, Inches	*Depth, Inches	Quantity, per Box	Wt., lbs., per Box	Item No.
566	1¼	1¼	72	14¾	22105
568	2½	2½	24	17	22106

*Depth is from center of screw to frame.

Hargrave Junior Clamp

Nos. 551, 552

Designed especially for model and pattern making, aircraft construction and other medium clamping operations. Malleable frame has rust-resisting finish. Steel screw, oscillating (ball and socket) tip.

No. 556

Deep Reach Patterns with Button Type Tip

No.	Opening, Inches	*Depth, Inches	Quantity, per Box	Wt., lbs., per Box	Item No.
551	4	2⅞	6	8⅛	22101
552	6	3¼	6	14¼	22102
556	2½	4½	6	7	22104

*Depth is from center of screw to frame.

Hargrave Clamp Fixture No. 600—Fits ¾" Pipe

Easy to assemble on any length ¾" pipe. All parts are best grade malleable and finished in attractive red baked-on enamel, except the screw, which is steel, and the cam, which is hardened steel. Extra heavy black iron pipe is recommended for ordinary clamping, and double extra when greater pressure is required. Slide will not slip under pressure; will not stick when pressure is released. Frame tapped for standard pipe thread.

Number	Clamping Slide		Surface Tip	Screw Diameter	Quantity per Box	Wt., lbs., per Box	Item No.
600	1¾"	x	1¾"	⅝"	1 Set	2½	22201

A set consists of ONE CLAMP (frame, screw, handle, tip and slide) complete without pipe.

Hargrave Clamp Fixture No. 620—Fits ½" Pipe

Easy to assemble on any length of ½" pipe. Frame and slide are best grade malleable, finished in attractive red baked-on enamel. Frame is tapped for standard pipe thread. Screw is steel, "Acme" thread, with sliding pin handle. Slide will not slip under pressure; will not stick when pressure is released. Cam is hardened steel (trigger-type) with milled teeth.

Number	Clamping Slide		Surface Tip	Screw Diameter	Quantity per Box	Wt., lbs., per Box	Item No.
620	1½"	x	1½"	½"	1 Set	1⅜	22202

A set consists of ONE CLAMP (frame, screw, handle, tip and slide) complete without pipe.

All above FLC-2702

Hargrave Mitre Frame Clamp No. 780

Clamps all four corners at one time. Quickly adjusted. Absolutely accurate. Aluminum alloy corner blocks. Screws and adjusting nuts are steel.

No. 780-E Extension Screws

Each set increases capacity of No. 780 clamp 12". Any number of extensions may be used.

No. 780-E available only in sets of four.

Number	Capacity	Screw Diameter	Quantity, per Box	Wt., lbs. per Box	Item No.
780	2" to 14"	¼"	1	1⅛	26401
780-E	12" Each	¼"	4	¾	26402

Hargrave Light Duty Bar Clamp No. 458

for gluing and clamping

Strong, light and durable. Intended for clamping where speed and rapidity of handling are more necessary than power. High-carbon steel bar; "Acme" thread steel screw is heat-treated. Malleable frame, tip, slide and handle. Steel pawl.

Opening, Feet	Clamping Surface	Bar Dimension	Wt., lbs., Each	Item No.
3	1¼" Deep x 1⅜" Wide	3/16"x1⅛"	4	21702

FLC-2702

Hargrave Extra Heavy Duty Bar Clamp No. 750 For Heavy Steel Fabrication

The strongest and heaviest bar clamp made. Frame, tip and slide made of high grade malleable.

Note weight before ordering.

Opening, Feet	Clamping Surface	Screw Diameter	*Bar Dimension	Wt., lbs., Each	Item No.
4	4" Deep x 3" Wide	1"	⅝"x2½"	38½	21902
6	4" Deep x 3" Wide	1"	⅝"x2½"	48¼	21904
12	4" Deep x 3" Wide	1"	⅝"x2½"	76¾	21908

*Holes spaced 2½" on center.

Hargrave Bar Clamp Heavy Duty No. 450

BAR—High carbon manganese steel, for greater strength.
FRAME—Best grade malleable iron.
SLIDE—Best grade malleable iron. Cannot slip or bind; easily released. Pawl for slide is tempered steel.
TIP—Best grade malleable iron. Has case-hardened thrust bearing for end of screw, insuring long, satisfactory service.
SCREW—Steel, with deep-cut "Acme" thread and extra long bearing, insures added life to the clamp.
HANDLE—Steel, with wood grip, reinforced with heavy steel ferrule and cap to prevent breaking.

Opening, Feet	Clamping Surface	Screw Dia.	Bar Dimension	Wt., lbs, Each	Item No.
4	2¼" Deep x 2¼" Wide	¾"	⅜"x1¾"	15¾	21602
6	2¼" Deep x 2¼" Wide	¾"	⅜"x1¾"	20	21604
8	2¼" Deep x 2¼" Wide	¾"	⅜"x1¾"	24½	21606
10	2¼" Deep x 2¼" Wide	¾"	⅜"x1¾"	28½	21607

All above FLC-2702

Hargrave Regular Duty "I" Bar Clamp No. 640

No other clamp has this patented locking device. It provides a positive stop—cannot bind or slip, releases readily.

Case-hardened thrust bearings.

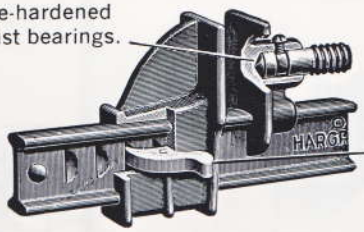

Hardened steel pawl. Quick action, with no slipping.

A rapid acting, powerful clamp designed and constructed for hard, everyday production work. Superiority of exclusive features has made it the favorite among users.

Bar is shaped to provide great strength for its weight. Smooth, wide flange will not mar working surfaces.

Patented quick action, no slip notches are 1/2" apart and formed in the web for greater bar strength.

Malleable iron slide cannot slip or bind. Easily released. Heavy tempered steel pawl engages notches, insures positive stop, years of trouble-free service.

Malleable iron tip has case-hardened thrust bearing for end of screw, eliminates wear. Long yoke prevents binding.

Opening, Feet	Clamping Surface	Screw Dia.	Bar Dimension	Wt., lbs., Each	Item No.
2	1 13/16" Deep x 1 7/8" Wide	5/8"	7/16"x1 1/2"x5/32"	7	21801
2 1/2	1 13/16" Deep x 1 7/8" Wide	5/8"	7/16"x1 1/2"x5/32"	7 3/4	21802
3	1 13/16" Deep x 1 7/8" Wide	5/8"	7/16"x1 1/2"x5/32"	8 1/4	21803
4	1 13/16" Deep x 1 7/8" Wide	5/8"	7/16"x1 1/2"x5/32"	9 1/2	21804
5	1 13/16" Deep x 1 7/8" Wide	5/8"	7/16"x1 1/2"x5/32"	10 3/4	21805
6	1 13/16" Deep x 1 7/8" Wide	5/8"	7/16"x1 1/2"x5/32"	12	21806
7	1 13/16" Deep x 1 7/8" Wide	5/8"	7/16"x1 1/2"x5/32"	13 1/4	21807

FLC-2702

Hargrave Quick Clamps

Patented design clamps used extensively in pattern making, boat and ship building, automobile and airplane building and general woodworking. Construction of frame and foot provides unusual strength, eliminates danger of twisting due to high stress. Clamps can be applied and removed instantly by hand and remain rigid at any opening. Clutch will not slip or bind. High carbon manganese bar is rolled from special steel. Frame and foot formed from best grade malleable. Specially treated steel screw has "Acme" thread, long bearing for extra long life. Frame is moveable, foot stationary. Depth is from center of screw to bar.

No. 506 Med. Wt.

Opening, Inches	Bar Dim.	Depth, Inches	Wt., lbs., Each	Item No.
6	5/16"x1"	3 1/2	2 7/8	25401
8	5/16"x1"	3 1/2	3	25402
12	5/16"x1"	3 1/2	3 3/8	25403
18	5/16"x1"	3 1/2	3 7/8	25404

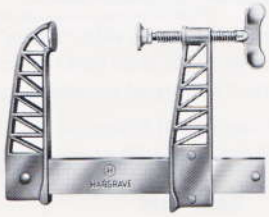

No. 508

Opening, Inches	Bar Dim.	Depth, Inches	Wt., lbs., Each	Item No.
8	3/8"x1 3/4"	6	8	25502
12	3/8"x1 3/4"	6	8 3/4	25503
18	3/8"x1 3/4"	6	10	25504
24	3/8"x1 3/4"	6	11 1/8	25505
36	3/8"x1 3/4"	6	12 1/4	25506

Hargrave Steel Spindle Hand Screws

Nos. 706, 708 710, 712, 714, 716

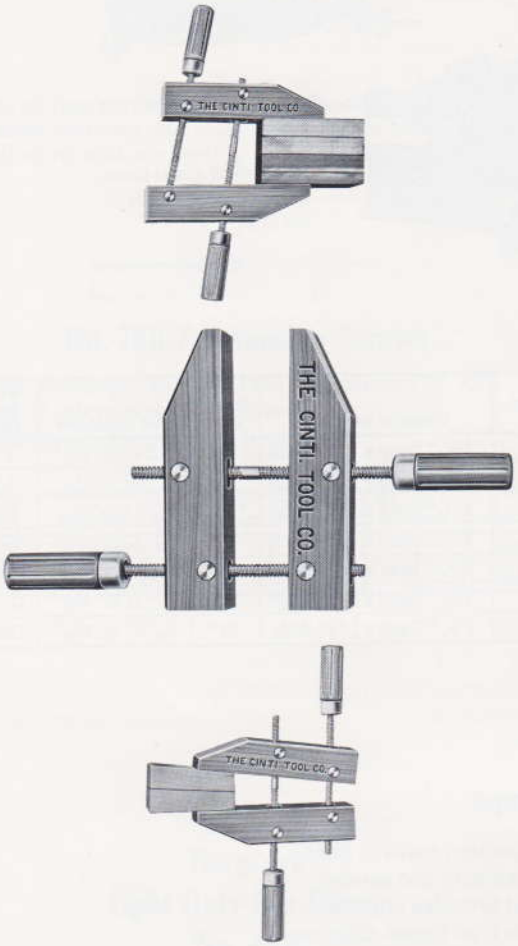

Hargrave Hand Screws are conventional in size and proportion; yet they have refinements not found in other hand screws.

JAWS — Specially selected Hard Maple, properly seasoned and oiled.

SPINDLES — Cold-rolled steel, with "Acme" thread, insures longer wear with less frictional resistance than the "V" thread commonly used.

HANDLES — The handles of Hargrave Hand Screws are fluted, thus affording a better grip under all conditions.

No.	Jaw Length	Open-ing	Jaw Depth	No. per Carton	Weight per Carton	Item No.
706	6″	3″	2 31/32″	6	6¼	22402
708	8″	4½″	4⅛″	6	12¼	22403
710	10″	6″	5¼″	6	15⅞	22404
712	12″	8½″	5 31/32″	6	25⅝	22405
714	14″	10″	6 29/32″	4	21⅜	22406
716	16″	12″	7 15/16″	4	29½	22407

Conforms to Fed. Spec. GGG-C-406C, Type 4, Hand Screw Adjustable.

All above FLC-2702

Wear Safety Goggles.

HARGRAVE CHISELS

Hargrave Chisels are trip-hammer forged from special analysis alloy steel. Accurately controlled heat treatment permits head and cutting edge hardness differential for maximum life. Generous chamfer. Design offers better proportion and balance.

Hargrave Cold Chisels No. 200

Size, Inches	Quantity, per Box	Wt., lbs., per Box	Item No.
¼ x 5	12	⅞	22501
5/16 x 5	12	⅞	22502
⅜ x 5	12	1⅜	22503
½ x 6	6	1⅝	22504
⅝ x 6½	6	2¼	22505
¾ x 7½	6	4	22506
⅞ x 8	6	6	22507
1 x 8½	6	8½	22508

Finished with blue baked-on enamel body, polished blade. **FLC-2494**

Hargrave Cold Chisels Extra Long No. 205

Size, Inches	Quantity per Box	Wt., lbs., per Box	Item No.
½ x 12	6	3⅜	22602
⅝ x 12	6	4¼	22603
¾ x 12	6	6½	22604
⅞ x 12	6	9⅜	22605
1 x 12	6	12½	22606
¾ x 18	Bulk	1¾ Ea.	22607
1 x 18	Bulk	3¼ Ea.	22609

Finished with blue baked-on enamel body. **FLC-2494**

Hargrave Chisel Kit No. 150

Attractively designed for practical use in factory, shop, garage and home. Durable plastic case for convenient storage or carrying; pre-punched reinforced eyelet for hanging over work bench. No. 150 Kit includes Plastic Case with 4 Cold Chisels as follows: 1 each ¼″, ⅜″, ½″, ⅝″, in one package.

Bulk packaged, Wt. 1 lb. Item No. 23903.

Hargrave Cape Chisel No. 223

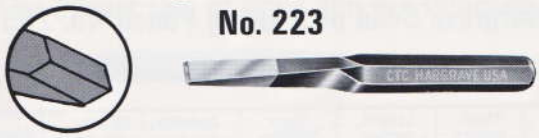

Hargrave Half Round Chisel No. 233

Hargrave Diamond Point Chisel No. 243

The following applies to each of these three chisels.

Cutting Edge, Inches	Size Stock, Inches	Length, Inches	Quantity, per Box	Wt., lbs., per Box	Item No. #223	Item No. #233	Item No. #243
1/8	5/16	4 1/2	12	1	22701	22801	22901
3/16	3/8	5	12	1 3/4	22702	22802	22902
1/4	1/2	6 1/2	6	1 7/8	22703	22803	22903
5/16	5/8	7	6	3	22704	22804	22904
3/8	5/8	7 1/2	6	3 3/8	22705	22805	22905
1/2	3/4	8	6	5	22706	22806	22906

Finished with blue baked-on enamel body, polished blade. **FLC-2494**

Hargrave All-Steel Wood Chisels No. 577

Due to quality and temper of steel, this chisel will not break or take a set when used as intended. Handle will stand use of hammer without breaking — much more durable than wood handle chisel.

Cutting Edge, Inches	Size Stock, Inches	Length, Inches	Quantity, per Box	Wt., lbs., per Box	Item No.
3/4	5/8	10 1/2	6	5 1/8	23002
1	5/8	10 1/2	6	5 1/2	23003

Finished with blue baked-on enamel body, polished blade. **FLC-2492**

Hargrave Wrecking Chisel No. 582

Due to design, quality of steel and temper, these chisels will not break or take a set when used as intended.

No. 582—STRAIGHT

Number	Cutting Edge, Inches	Size Stock, Inches	Length, Inches	Quantity, per Pkg.	Wt., lbs., per Pkg.	Item No.
582	1 1/2	3/4	18	3	7	23201

Finished with blue baked-on enamel body, polished blade. **FLC-2492**

Hargrave Plugging Chisel No. 963

Cutting Edge, Inches	Size Stock, Inches	Length, Inches	Quantity, per Box	Wt., lbs., per Box	Item No.
1/4	5/8	10	6	4 1/2	23802

Finished with blue baked-on enamel body, polished blade. **FLC-2493**

Hargrave Hexagon Brick Chisel No. 944

Cutting Edge, Inches	Size Stock, Inches	Length, Inches	Quantity, per Pkg.	Wt., lbs., per Pkg.	Item No.
1	5/8	12	3	3 1/2	23501

Finished with blue baked-on enamel body, polished blade. **FLC-2493**

Hargrave Floor Chisels No. 950

Due to design, quality and temper of steel, this chisel will not break or take a set when used as intended. The thin blade enables carpenter, plumber or electrician to cut tongues off floor boards and lift them, without marring the surface. Blade tempered to cut nails.

Width Blade, Inches	Size Stock, Inches	Length, Inches	Quantity, per Box	Wt., lbs., per Box	Item No.
2 1/2	5/8	11	6	7	23601
3	5/8	12	6	7 7/8	23602

Finished with blue baked-on enamel body, polished blade. **FLC 2492**

Hargrave Bull (Stone) Point No. 584

Trip-hammer forged from special analysis alloy steel. Each tool properly tempered and tested to insure long, satisfactory service.

Size, Inches	Wt., lbs. Each	Item No.
3/4x12	1 1/2	23302
1 x12	2 1/2	23304
1 x18	4	23306

Finished with blue baked-on enamel body. **FLC-2493**

Hargrave Pinch and Lining Bar No. 330

This handy tool is trip-hammer forged from an especially tough grade of steel and carefully heat-treated. It has many uses in lining and prying.

Length, Inches	Diameter Stock, Inches	Taper, Inches	Quantity, per Pkg.	Wt., lbs., per Pkg.	Item No.
15 1/2	1/2	5 3/8	3	2 1/4	24201

FLC 2491

HARGRAVE PUNCHES

Hargrave Punches are trip-hammer forged from special analysis alloy steel. Precisely controlled heat treatment insures maximum hardness and toughness for longer tool life. Finished with blue baked-on enamel body and polished taper.

Hargrave Center Punch No. 284

Stock, Inches	Point, Inches	Length, Inches	Quantity, per Box	Wt., lbs., per Box	Item No.
1/4	5/64	3 1/2	12	1/2	24101
5/16	1/8	3 3/4	12	7/8	24102
3/8	5/32	4 1/2	12	1 3/8	24103
1/2	7/32	5 1/2	6	1 1/2	24104
5/8	3/8	6 1/2	6	3	24105

Hargrave Prick Punch No. 2873

Stock, Inches	Length, Inches	Quantity, per Box	Wt., lbs., per Box	Item No.
1/4	4	12	5/8	24801
3/8	5	12	1 3/4	24802
1/2	6	6	1 3/4	24803

Hargrave Pin Punches

No. 2864—4 Inch

Point, Inches	Stock, Inches	Pin Length, Inches	Quantity, per Box	Wt., lbs., per Box	Item No.
1/16	5/16	1/2	12	7/8	24501
3/32	5/16	11/16	12	7/8	24502
1/8	5/16	3/4	12	7/8	24503
5/32	5/16	13/16	12	7/8	24504
3/16	5/16	15/16	12	7/8	24505
7/32	3/8	1	12	1 1/4	24506
1/4	3/8	1	12	1 3/8	24507
5/16	7/16	1	6	1	24508
3/8	1/2	1	6	1 1/4	24509

No. 2866—6 Inch

Point, Inches	Stock, Inches	Pin Length, Inches	Quantity, per Box	Wt., lbs., per Box	Item No.
3/32	3/8	1 11/16	12	1 5/8	24601
1/8	3/8	1 11/16	12	1 3/4	24602
5/32	3/8	1 3/4	12	1 3/4	24603
3/16	3/8	1 3/4	12	1 7/8	24604
7/32	3/8	1 7/8	12	1 7/8	24605
1/4	3/8	1 7/8	12	2	24606

No. 2869—9 Inch

Point, Inches	Stock, Inches	Pin Length, Inches	Quantity, per Box	Wt., lbs., per Box	Item No.
1/8	1/2	3 1/2	6	2	24701
3/16	1/2	3 1/2	6	2 1/8	24702
1/4	1/2	3 1/2	6	2 1/4	24703
5/16	1/2	3 1/2	6	2 3/8	24704
3/8	5/8	3 1/2	6	3 1/4	24705

Hargrave Solid or Starting Punch No. 263

Point, Inches	Stock, Inches	Length, Inches	Taper, Inches	Quantity, per Box	Wt., lbs., per Box	Item No.
1/16	3/8	4 1/2	1 7/8	6	5/8	24001
1/8	3/8	4 1/2	2	6	5/8	24002
5/32	3/8	5	2	6	3/4	24003
3/16	7/16	5 1/2	2	6	1 1/4	24004
1/4	1/2	6	2 1/2	6	1 5/8	24005
5/16	1/2	6	2 1/2	6	1 5/8	24006
3/8	5/8	6 1/2	2 3/4	6	2 7/8	24007
1/2	5/8	7	2 1/2	6	3 1/2	24008

Hargrave Drift Punch No. 630

Point, Inches	Stock, Inches	Length, Inches	Taper, Inches	Quantity, per Box	Wt., lbs., per Box	Item No.
3/16	5/8	10	5	6	3 3/4	24401
1/4	5/8	10	5	6	4	24402
5/16	5/8	10	5	6	4	24403
3/8	3/4	10	5	6	5 3/4	24404

Hargrave Lining-Up Punch No. 620

Point Inches	Stock, Inches	Length, Inches	Taper, Inches	Quantity, per Box	Wt., lbs., per Box	Item No.
1/8	3/8	9	4 3/8	6	1 1/4	24301
5/32	1/2	10	6	6	2 1/4	24303
3/16	1/2	9	6	6	2 5/8	24302
3/16	5/8	12	6 13/16	6	4 1/8	24304
1/4	5/8	12	7 1/2	6	4 3/8	24305
3/8	5/8	12	9	6	5 1/2	24306
5/16	3/4	12	7 1/4	6	6 3/8	24307
1/4	3/4	18	8 3/8	3	5	24308
1/2	7/8	18	9 1/2	3	7 1/4	24309

Hargrave Chisel and Punch Kit No. 140

Attractively designed for practical use in factory, shop, garage and home. Durable red plastic case, easily rolled for convenient storage or carrying; pre-punched reinforced eyelets for hanging over work bench. No. 140 Kit includes Plastic Case with 10 Chisels and Punches as follows: Cold Chisels: 1 each 1/4", 1/2", 5/8"; Half Round Chisel: 1 (3/16"); Dia. Point Chisel: 1 (3/16"); Cape Chisel: 1 (3/16"); Center Punch: 1 (3/8"); Solid Punch: 1 (1/8"); Pin Punch: (2866) 1 each 5/32", 1/8", in one package. Packaged bulk. Weight 2 lbs. Item No. 23902.

All above FLC-2495 except #140

The Proper Use of Solid and Pin Punches

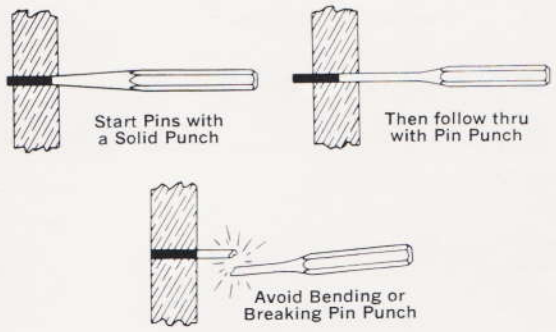

Hargrave Chisel & Punch Kit No. 160

Attractively designed for practical use in factory, shop, garage and home. Durable plastic case for convenient storage or carrying; pre-punched reinforced eyelet for hanging over work bench. No. 160 Kit includes Plastic Case with 4 Chisels and Punches as follows: 2 Cold Chisels 3/8", 5/8"; 1 Solid Punch 5/32"; 1 Center Punch 3/8", in one package. Bulk packaged, Wt. 1 lb. Item No. 23904.

Hargrave Washer Cutter-Brace No. 407

Capacity 5/8" thru 6"

Cuts washers from leather, paper, rubber, sheet lead or thin wood, cutting both inner and outer circle at same time; adaptable to any ordinary brace. Malleable body, steel pin, tool steel blades properly ground and tempered. Frame is polished and painted red. Knurled thumbscrews for adjusting.

Number	Quantity, per Box	Wt., lbs., per Box	Item No.
407	1	1	27101

Hargrave Washer Cutter-Hand No. 411

Capacity 4" thru 20"

This tool is adapted to cutting gaskets from 4 to 20 inches in diameter. The knives are of tool steel, well tempered, and are adjusted by knurled thumbscrews. The center pin is also of steel. The frame is aluminum.

Number	Quantity, per Box	Wt., lbs., per Box	Item No.
411	1	1 3/8	27105

Hargrave Hand Star Drill No. 800

Forged from special analysis alloy steel. Properly designed and tempered to insure long, satisfactory service.

Size, 12" Length	Quantity, per Box	Wt., lbs. per Box	Item No.
1/4"	12	1 3/4	26501
3/8"	12	3 1/2	26503
1/2"	12	5	26504
5/8"	12	6 5/8	26505
3/4"	6	4 3/8	26506
7/8"	6	6 3/4	26507
1"	6	6 1/2	26508
5/8"	12	9 7/8	26510
1"	6	10 1/8	26513

FLC-2554

Hargrave Deep Fluted Rotary Dust Ejector Masonry Drills

This carbide tipped rotary drill assures clean round holes in brick, concrete, slate, marble, porcelain, stone, wallboard, plaster, etc., with minimum noise and effort. Wide, smooth, round flutes with proper pitch bring out the dust faster for continuous, easier, cleaner and deeper drilling.

SPIRAL FLUTED DRILLS

Number	Nominal Dia.	Shank Dim. Dia. "B"	Shank Dim. Lgth. "C"	Overall Drill Lgth. "D"	Quan., per Pkg.	Wt., lbs., per Pkg.	Item No.
FDM-3	3/16"	11/64"	—	3"	6	3/8	26701
FDM-4	1/4"	15/64"	—	*4"	6	3/8	26702
FDM-5	5/16"	1/4"	1 1/4"	*4"	6	5/8	26704
FDM-6	3/8"	1/4"	1 1/4"	*4"	6	1 1/2	26706
FDM-7	7/16"	1/4"	1 1/2"	6"	6	1 1/8	26708
FDM-8A	1/2"	1/4"	1 1/2"	6"	6	1 1/4	26709
FDM-8B	1/2"	3/8"	—	6"	6	1 5/8	26710
FDM-10	5/8"	1/2"	1 1/2"	6"	6	1 1/8	26712
FDM-12	3/4"	1/2"	1 1/2"	6"	6	1 1/2	26714
FDM-14	7/8"	1/2"	1 1/2"	6"	3	2	26715
FDM-16	1"	1/2"	1 1/2"	6"	3	2 3/8	26716

*In 6" lengths Item No.'s are 26703, 26705 and 26707. 4" furnished unless 6" specified.

FLC 2613

THE WARREN GROUP

CINCINNATI TOOL
COLUMBIAN VISE
WARREN TOOL

Division of Warren Tool Corporation
Box 68, Hiram, Ohio 44234 • Phone 216/569-3224

Cincinnati Tool Division
Columbian Vise Division
Warren Tool Division

Litho in U.S.A. No. 375